digital EQUIPMENT CORPORATION

DRAWING DIRECTORY

"THIS DRAWING AND SPECIFICATIONS, HEREIN, ARE THE PROPERTY OF DIGITAL EQUIPMENT CORPORATION AND SHALL NOT BE REPRODUCED OR COPIED OR USED IN WHOLE OR IN PART AS THE BASIS FOR THE MANUFACTURE OR SALE OF ITEMS WITHOUT WRITTEN PERMISSION. COPYRIGHT (C) 1975 , DIGITAL EQUIPMENT CORPORATION"

CUSTOMER PRINT SET INDEX

SEQUENCE SEQUENCE

THIS IS PRINT SET

UNIT VARIATIONS

VAR	TITLE	PRINT SET
VT5Ø-AA	KYBD DISPLAY TERMINAL, CURRENT LOOP 115V 6Ø HZ	
VT5Ø-AB	KYBD DISPLAY TERMINAL, CURRENT LOOP 23ØV 5Ø/5Ø HZ	
VT5Ø-AC	KYBD DISPLAY TERMINAL, CURRENT LOOP 100/127V 5Ø/6Ø HZ	
VT5Ø-BA	KYBD DISPLAY TERMINAL, COPIER,CURRENT LOOP 115V 6Ø HZ	
VT5Ø-BB	KYBD DISPLAY TERMINAL, COPIER, CURRENT LOOP 23ØV 5Ø/6ØHZ	
VT5Ø-BC	KYBD DISPLAY TERMINAL, COPIER,CURRENT LOOP 100/127V 5Ø/6ØHZ	
VT5Ø-HA	KYBD DISPLAY TERMINAL, CURRENT LOOP,DIRECT CURSOR CONTROL 115V 6Ø HZ	
VT5Ø-HB	KYBD DISPLAY TERMINAL CURRENT LOOP, DIRECT CURSOR CONTROL 22Ø/24ØV 5Ø/6Ø HZ	
VT5Ø-HC	KYBD DISPLAY TERMINAL CURRENT LOOP, DIRECT CURSOR CONTROL 100/127V 5Ø/6Ø HZ	
VT5Ø-JA	KYBD DISPLAY TERMINAL CURRENT LOOP, DIRECT CURSOR CONTROL COPIER 115V 6Ø HZ	
VT5Ø-JB	KYBD DISPLAY TERMINAL CURRENT LOOP, DIRECT CURSOR CONTROL COPIER 22Ø/24ØV 5Ø/6Ø HZ	
VT5Ø-JC	KYBD DISPLAY TERMINAL CURRENT LOOP, DIRECT CURSOR CONTROL COPIER 100/127V 5Ø/6Ø HZ	

REVISIONS

DATE	CHG. NO.	REV
4/75	VT50-6	A
6/75	VT50-10	B
6/75	VT50-11	C

USED ON OPTION/MODEL: VT5Ø

		DATE
DRN.	J. CAHILL	2/19/75
CHK'D.	J. CAHILL	2/19/75
PROJ ENG.	[signature]	2-24-75
PROD.	[signature]	[illegible]
FIELD SERV	[signature]	[illegible]

TITLE: DRAWING DIRECTORY (VT5Ø)

SIZE: B | CODE: DD | NUMBER: VT5Ø-Ø | REV: C

DIST

SHEET 1 OF 5

DRB 106

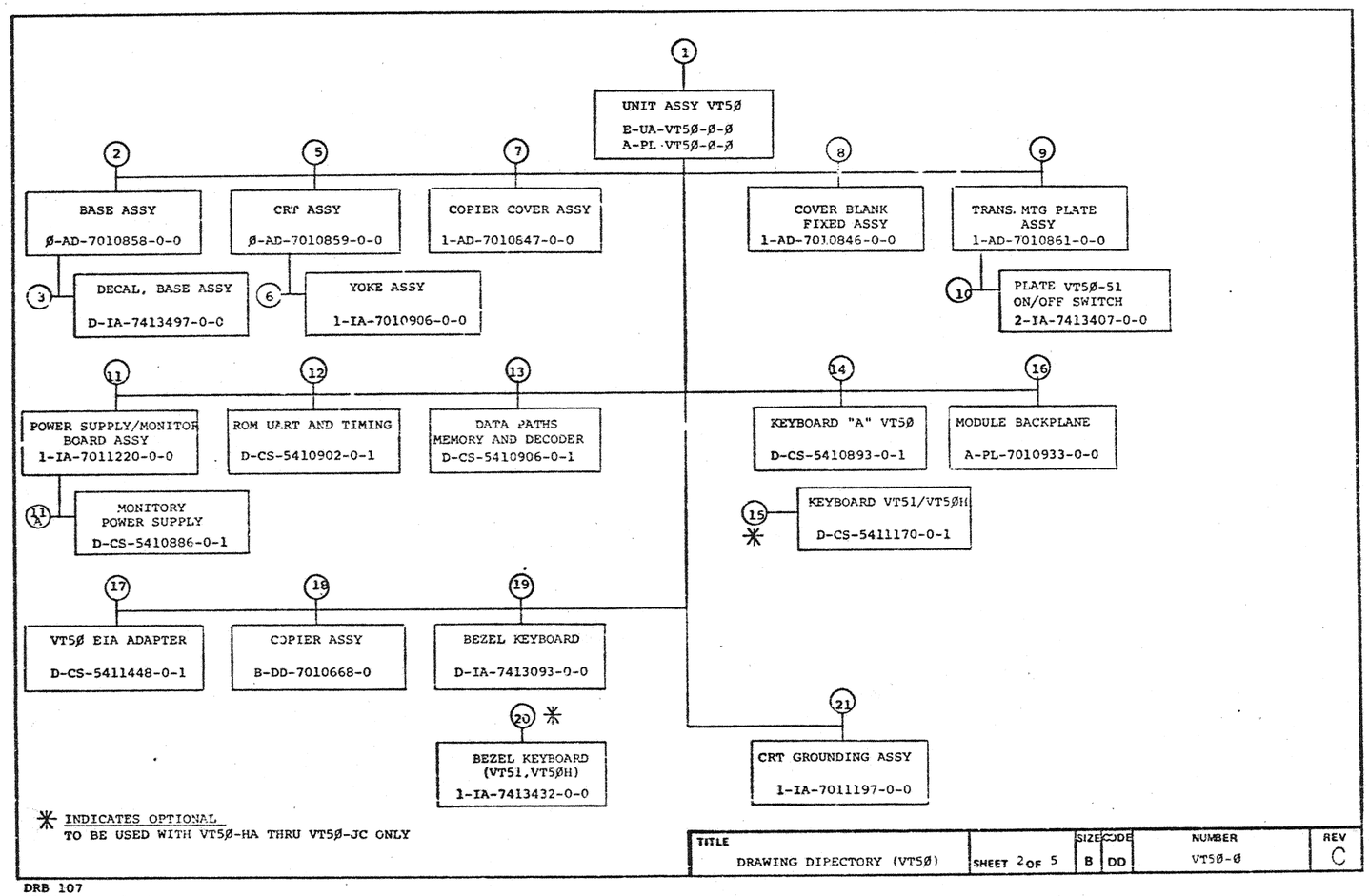

DRB 107

DEC 16-(329)-1062-3-N871

CUSTOMER PRINT SET	MFG. SET	FIND NO.	ELECTRICAL DRAWING NO.	REV.	NO OF SHT	DESCRIPTION	OPTION NO./FILE DATE
		1	Ø-UA-VT5Ø-Ø-Ø		2	UNIT ASSY VT5Ø	
			A-PL-VT5Ø-Ø		2	ENGINEERING SPEC.	
			A-SP-VT5Ø-Ø-2			ACCEPTANCE SPEC.	
			A-SP-VT5Ø-Ø-3			MFG. SPEC.	
			A-SP-VT5Ø-Ø-1			ENGINEERING SPEC.	
		11	1-IA-7011220-0-0			POWER SUPPLY ASSY	
			1-IA-7011186-0-0			HARNESS POWER SUPPLY	
			1-IA-7011187-0-0			HARNESS YOKE	
			2-IA-7413948-0-0			HARNESS CRT	
		11A	D-CS-5410886-0-1		4	MONITOR POWER SUPPLY	
			K-CO-5410886-0-4		1	X-Y COORDINATE HOLE LOCATION	
			D-AH-5410886-0-5		1	ASSY/DRILLING HOLE LAYOUT	
			L-MH-5410886-0-6		1	MODULE HISTORY	
			E-IA-7412849-0-0		1	SPREADER HEAT	
			E-MD-9606362-0-0		1	PERIPHERY DIE	
		12	D-CS-5410902-0-1		4	ROM UART AND TIMING	
			K-CO-5410902-0-4		1	X-Y COORDINATE HOLE LOCATION	
			D-AH-5410902-0-5		1	ASSY/DRILLING HOLE LAYOUT	
			B-MH-5410902-0-6		1	MODULE ECO HISTORY	
			E-MD-9606361-0-0		1	PERIPHERY DIE	
		13	D-CS-5410906-0-1		4	DATA PATHS MEMORY AND DECODER	
			K-CO-5410906-0-4		1	X-Y COORDINATE HOLE LOCATION	
			D-AH-5410906-0-5		1	ASSY/DRILLING HOLE LAYOUT	
			B-MH-5410906-0-6		1	MODULE ECO HISTORY	
			E-MD-9606360-0-0		1	PERIPHERY DIE	
			C-AD-7011144-0-0		1	CABLE ASSY	

CUSTOMER PRINT SET	MFG. SET	FIND NO.	ELECTRICAL DRAWING NO.	REV.	NO OF SHT	DESCRIPTION	OPTION NO./FILE DATE
		14	D CS-5410893 0 1		4	KEYBOARD "A" VT5Ø	
			K-CO 5410893 0 4		1	X-Y COORDINATE HOLE LOCATION	
			D-AH-5410893 0 5		1	ASSY/DRILLING HOLE LAYOUT	
			B-MH-5410893 0 6		1	MODULE ECO HISTORY	
			E-MD-9606359-0-0		1	PERIPHERY DIE	
			D-IA-7010912-0-0		1	CABLE ASSY	
		15	D-CS-5411170-0 1		2	KEYBOARD VT51/VT50H	
			K-CO 5411170-0-4		1	X-Y COORDINATE HOLE LOCATION	
			D-AH-5411170-0 5		1	ASSY/DRILLING HOLE LAYOUT	
			B-MH-5411170-0-6		1	MODULE ECO HISTORY	
			D-IA 7010912 0 0		1	CABLE ASSY	
		16	A-PL-7010933-0 0		1	MODULE PACKAGE (VT5Ø)	
			D CS 5410886-0-1		1	MONITOR POWER SUPPLY	
			D CS-5410906 0 1		1	DATA PATHS MEM. AND DECODER	
			D CS 5410902-0 1		1	ROMUART AND TIMMING	
			A-SP 3700179 0 0		3	PACKAGING INST.	
			A-SP 3700180-0 0		2	PACKAGING INST.	
			A-SP 3700181 0 0		2	PACKAGING INST.	
			A SP 3700182 0 0		2	PACKAGING INST.	
		17	D-CS-5411448 0 1		4	VT5Ø EIA ADAPTER	
			K-CO-5411448 0-4		1	X-Y COORDINATE HOLE LOCATION	
			D-AH-5411448-0 5		1	ASSY/DRILLING HOLE LAYOUT	
			B-MH-5411448-0-6		1	MODULE ECO HISTORY	
		18	B-DD 7010668-0			COPIER ASSY	
		19	A-PL-PDPIO-0-SHIP		1	DEC SYSTEM 10 SHIPPING LIST	
		20	D-IA-7011089 0-0		1	DEC SYSTEM 10 283 TO VT50 CABLE	

CUSTOMER PRINT SET CODES	
	X = PRINT OF DOCUMENT INCLUDED IN PRINT SET
	C = INCLUDES ALL PRINTS INDICATED ON DOCUMENT
	S = CONFIDENTIAL AUTHORIZED SIGNATURE REQUIRED

TITLE	SHEET	SIZE	CODE	NUMBER	REV
DRAWING DIRECTORY (VT5Ø)	3 OF 5	B	DD	VT5Ø Ø	C

DPB 108

DEC 16-(325)-1063-28-R972

CUSTOMER PRINT SET	MFG. SET	FIND NO.	DRAWING NO.	REV	NO OF SHT	DESCRIPTION	OPTION NO./FILE DATE
		1	Ø-UA-VT5Ø-Ø-Ø		2	UNIT ASSY VT5Ø	
			A-PL-VT50-0-0			UNIT ASSY VT5Ø (PL)	
			C-IA-7010785-0-0		1	CASSETTE COVER	
			D-IA-7412866-0-0		1	LOUVER PLATE	
			C-IA-7413324-0-0		1	BRK'T PC BD TO CRT, (LEFT)	
			C-IA-7413325-0-0		1	BRK'T PC BD TO CRT, (RIGHT)	
			C-IA-7413326-0-0		1	BRK'T PC BD TO SHELL	
			2-MD-7413327-0-0		1	KEYBOARL MTG BRK'T (RIGHT)	
			2-MD-7413328-0-0		1	KEYBOARD MTG BRK'T (LEFT)	
			C-MD-7413400-0-0		1	BRK'T COPIER WELL	
			D-IA-7412866-0-0		1	HEAT SINK	
			E-MD-7411540-0-0		45	SHELL VT5Ø	
		2	Ø-AD-7010858-0-0		1	BASE ASSY	
			E-MD-7411539-0-0		2	BASE VT5Ø	
			1-MD-7413322-0-0		1	SCREEN, BASE, FRONT	
			1-MD-7413323-0-0		1	SCREEN, BASE, REAR	
		3	D-IA-7413497-0-0		1	DECAL BASE VT5Ø	
			D-DC-7413497-0-1		1	ART WORK (DECAL BASE)	

CUSTOMER PRINT SET	MFG. SET	FIND NO.	DRAWING NO.	REV	NO OF SHT	DESCRIPTION	OPTION NO./FILE DATE
		5	1-AD-7010859-0-0		1	CRT ASSY	
			1-IA-7413320-0-0		1	BRK'T RIGHT CRT,	
			1-IA-7413321-0-0		1	BRK'T LEFT CRT,	
		6	1-IA-7010906-0-0		1	YOKE ASSY	
			1611900			YOKE	
		7	1-AD-7010847-0-0		1	COPIER COVER ASSY	
			E-MD-7412574-0-0		1	COPIER COVER	
			1-MD-7413330-0-0		1	BRK'T COPIER COVER	
			1-MD-7413329-0-0		1	BRK'TCOPIER COVER	
		8	1-AD-7010846-0-0		1	COVER BLANK FIXED ASSY	
			E-MD-7412573-0-0		1	FIXLD COVER	
			D-MD-7413333-0-0		1	HOLDOWN, BLANK COVER	
			D-MD-7413331-0-0		1	STIFFNER, BLANK COVER	
		9	1-AD-7010861-0-0		1	TRANS. MTG. PLATE ASSY	
			D-IA-7412850-0-0		1	TRANS. MTG. PLATE	
			C-IA-7011019-0-0		1	POWER CORD (VT5Ø)	
			1-IA-7011130-0-0		1	HARNESS TRANS. 60 HZ	
			Ø-IA-7011131-0-0		1	HARNESS TRANS. 50 HZ	
		10	2-IA-7413407-0-0		1	PLATE VT5Ø-51 ON/OFF SW.	
			A-SS-7413407-0-1		1	SILK SCREEN	
			A-SS-7413407-0-2		1	SILK SCREEN	
			A-SS-7413407-0-3		1	SILK SCREEN	
		18	B-DD-7010068-0			COPIER ASSY	

CUSTOMER PRINT SET CODES		TITLE		SIZE	CODE	NUMBER	REV
	X = PRINT OF DOCUMENT INCLUDED IN PRINT SET C = INCLUDES ALL PRINTS INDICATED ON DOCUMENT S = CONFIDENTIAL AUTHORIZED SIGNATURE REQUIRED	DRAWING DIRECTORY (VT5Ø)	SHEET 4 OF 5	B	DD	VT5Ø-Ø	C

DRB 108

DEC 36-(3225)-1062-2B-R072

CUSTOMER PRINT SET	MFG. SET	FIND NO.	DRAWING NO.	REV	NO OF SHT	DESCRIPTION	OPTION NO./FILE DATE
			MECHANICAL				
		S	D-IA-7413093-0-0		1	BEZEL, KEYBOARD	
			A-SS-7413093-1-0		1	SILK SCREEN	
		20	1-IA-7413432-0-0		1	BEZEL, KEYBOARD	
			A-SS-7413432-1-0		1	SILK SCREEN	
		21	1-IA-701119,-0-0		1	CRT GROUNDING ASSY	
			2-MD-7413757-0-0		1	SUPPORT CRT GROUNDING	
			2-MD-7413956-0-0		1	STRAP, BRAIDED	

CUSTOMER PRINT SET	MFG. SET	FIND NO.	DRAWING NO.	REV	NO OF SHT	DESCRIPTION	OPTION NO./FILE DATE

CUSTOMER PRINT SET CODES	
	X = PRINT OF DOCUMENT INCLUDED IN PRINT SET
	C = INCLUDES ALL PRINTS INDICATED ON DOCUMENT
	S = CONFIDENTIAL AUTHORIZED SIGNATURE REQUIRED

TITLE		SIZE	CODE	NUMBER	REV
DRAWING DIRECTORY	SHEET 5 OF 5	B	DD	VT50 0	C

DPB 108

DEC 16-(325)-1062-23-R872

"THIS DRAWING AND SPECIFICATIONS, HEREIN, ARE THE PROPERTY OF DIGITAL EQUIPMENT CORPORATION AND SHALL NOT BE REPRODUCED OR COPIED OR USED IN WHOLE OR IN PART AS THE BASIS FOR THE MANUFACTURE OR SALE OF ITEMS WITHOUT WRITTEN PERMISSION.
COPYRIGHT ©1975, DIGITAL EQUIPMENT CORPORATION"

DO NOT SCALE DRAWING

NOTES:
1. BOND ITEM #2 (HANDLE, COVER) TO ITEM #1 (COVER) USE ADHESIVE PURCHASE SPEC. 4901178.
2. FINISH PER DEC SPEC 9200151-47
3. APPLY S&W POLANE PAINT.
4. COVER HANDLE NOT TO EXCEED 90±3° ANGLE WHEN BONDED TO COVER, TO SURFACE "A"

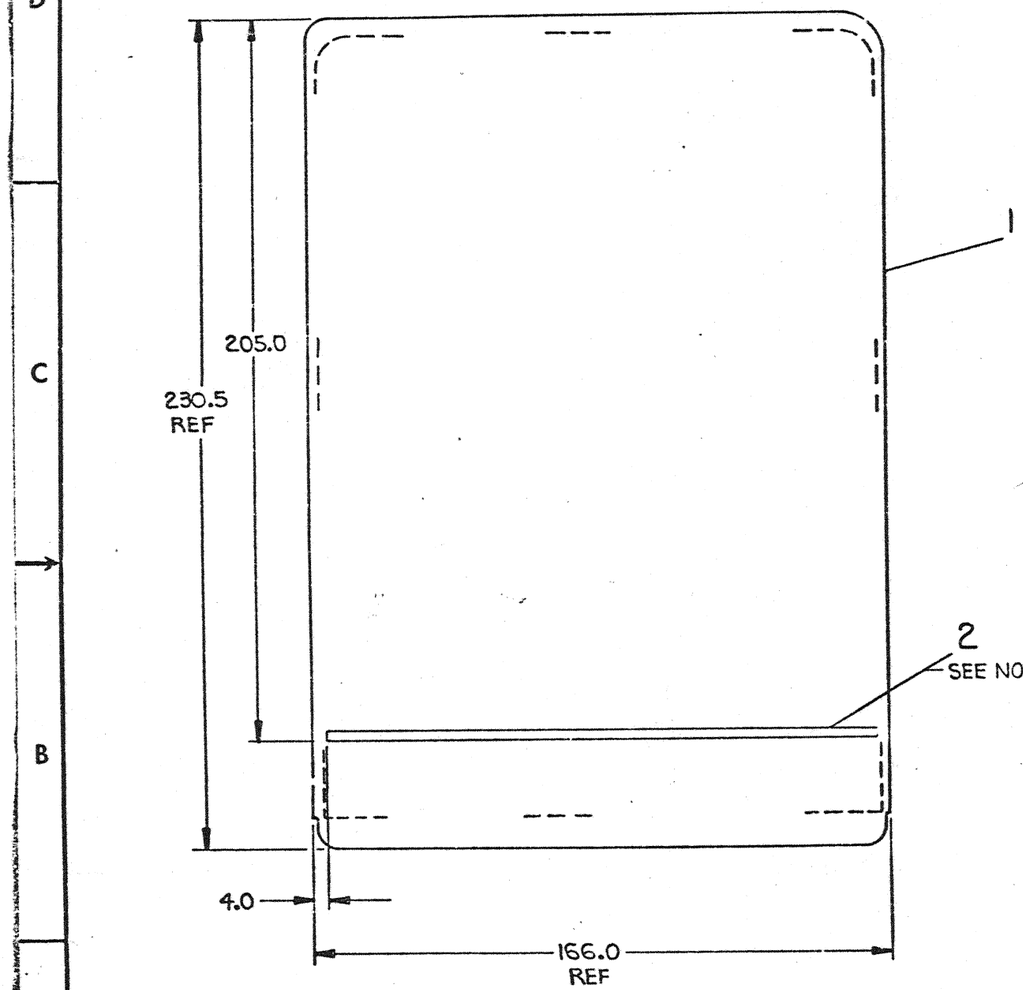

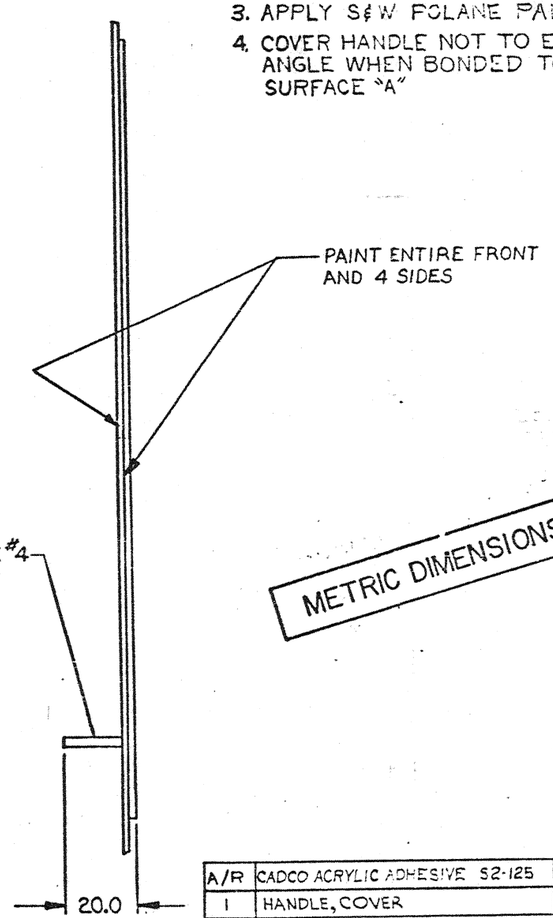

METRIC DIMENSIONS

REVISIONS			
CHK	CHANGE NO.	REV.	
ER	7010795-00001	A	E Renaud 1-23-75 L. BALOGH
ER	7010795-00002	B	L. BALOGH
ER	7010795-00003	C	L. BALOGH M. MORGANSTERN
	7010795-000C4	D	M. MORGANSTERN

A/R	CADCO ACRYLIC ADHESIVE S2-125	4901178	3
1	HANDLE, COVER	B-MD-7413396-0-0	2
1	COVER	C-MD-7413395-0-0	1
QTY.	DESCRIPTION	PART NO.	ITEM NO.

PARTS LIST

FIRST USED ON OPTION/MODEL: VT5Ø

UNLESS OTHERWISE SPECIFIED DIMENSION IN MILLIMETERS
TOLERANCES

MILLIMETERS	DECIMALS	ANGLES
X.XX=±0.10	±0.05	±0° 30'
X.X =±0.5	±0.2	
X =±2		

THIRD ANGLE PROJECTION

REMOVE BURRS AND BREAK SHARP CORNERS SURFACE QUALITY ▽

MATERIAL: SEE PARTS LIST

FINISH: SEE NOTE #2

DRN. S. Roberts	DATE 1-8-75	
CHK'D. L. Renaud	DATE 1-13-75	
ENG. W. Balog	DATE	
PROJ. ENG. M. Morganstern	DATE 1-13-75	
PROD. M. Morganstern	DATE 1-13-75	

NEXT HIGHER ASSY.

SCALE 1/1

SHEET 1 OF 1

digital EQUIPMENT CORPORATION MAYNARD MASSACHUSETTS

TITLE: COVER, CASSETTE (INTERIM)

SIZE	CODE	NUMBER	REV.
C	IA	7010795-0-0	D

DIST.

SIZE C | CODE IA | NUMBER 7010795-0-0 | REV. D

DEC FORM NO. DRC 100-B

"THIS DRAWING AND SPECIFICATIONS, HEREIN, ARE THE PROPERTY OF DIGITAL EQUIPMENT CORPORATION AND SHALL NOT BE REPRODUCED OR COPIED OR USED IN WHOLE OR IN PART AS THE BASIS FOR THE MANUFACTURE OR SALE OF ITEMS WITHOUT WRITTEN PERMISSION.
COPYRIGHT ©1974 DIGITAL EQUIPMENT CORPORATION"

NOTES:
1. MASK BOTTOM OF FLANGE BEFORE PAINTING.
2. PAINT THIS SIDE ONLY.
3. ALLOY 1100 PREFERED FOR MAXIMUM THERMAL CONDUCTIVITY. ALLOY 3003 ACCEPTABLE. ANY HARDNESS CONDITION ACCEPTABLE

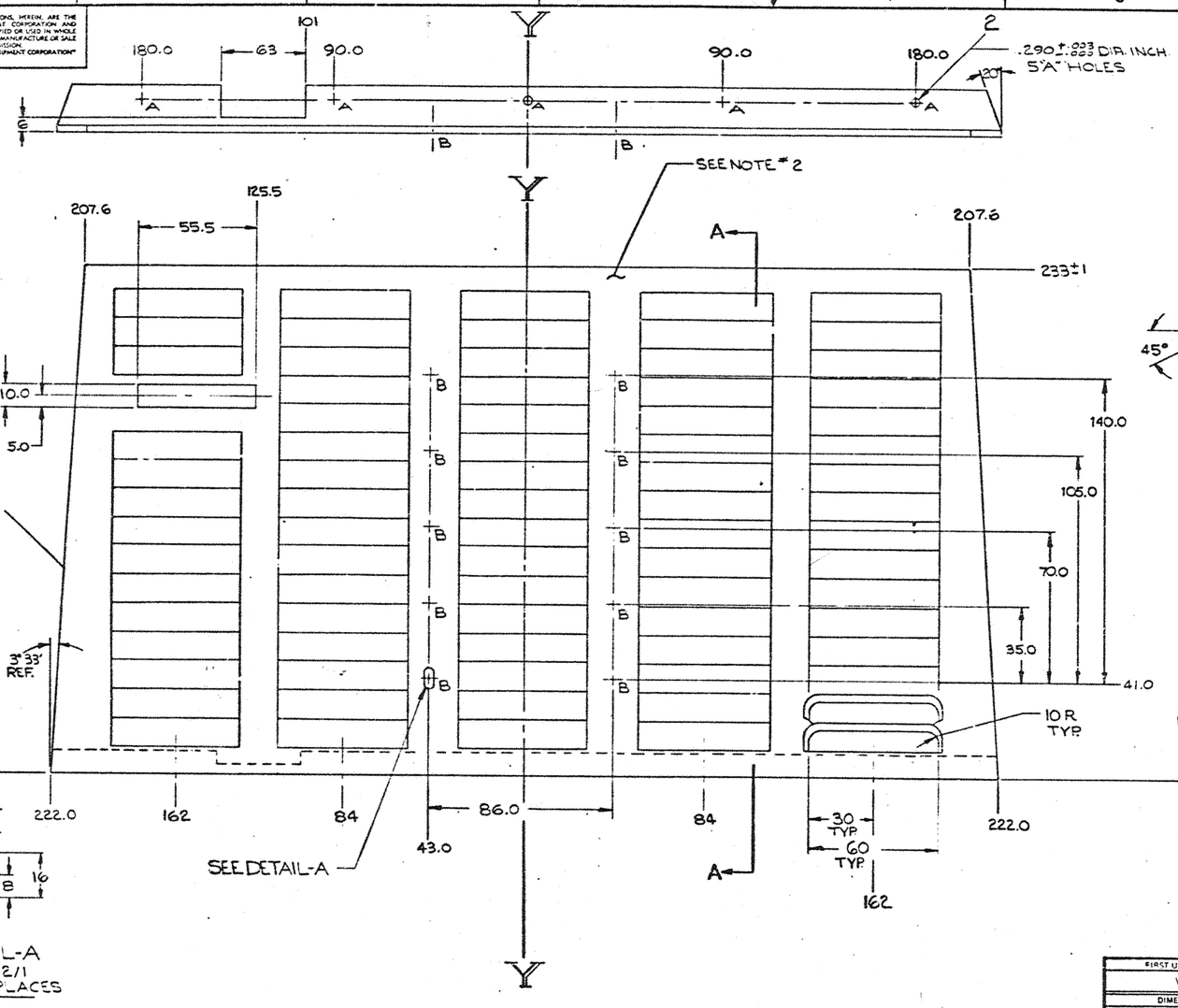

REVISIONS			
ENG	CHANGE NO.	REV	
TIT	7412356 (DIN 01)	A	

ITEM NO.	PART NO.	DESCRIPTION	QTY.
5	9003872	INSERT "8-32	2
1		PANEL REAR	1

PARTS LIST

FIRST USED ON OPTION/MODEL	VT50
DRN.	DATE
CHK'D	DATE
ENG.	DATE
PROJ. ENG.	DATE
PROJ.	DATE
NEXT HIGHER ASSY.	
MATERIAL 2.5 YM (.09) THK. AL SEE NOTE #3	E-A-VT50-0-0
FINISH 92-00151-47	SCALE 1/1
	SHEET 1 OF 1

DIMENSIONAL TOLERANCE
DIMENSIONS ARE ◆ MILLIMETERS / INCHES UNLESS OTHERWISE SPECIFIED

MILLIMETERS	INCHES	ANGLES
XXX ±0.10	XXX ±.005	±0° 30'
XX ±0.5	XX ±.02	
X ±2.	X ±.1	

THIRD ANGLE PROJECTION

REMOVE BURRS AND BREAK SHARP CORNERS/SURFACE QUALITY ✓

digital

TITLE: HEAT SINK

SIZE	CODE	NUMBER	REV.
D	IA	7412856-0-0	A

DIST

TOLERANCE 7412356-0-0 REV A

"THIS DRAWING AND SPECIFICATIONS, HEREIN, ARE THE PROPERTY OF DIGITAL EQUIPMENT CORPORATION AND SHALL NOT BE REPRODUCED OR COPIED OR USED IN WHOLE OR IN PART AS THE BASIS FOR THE MANUFACTURE OR SALE OF ITEMS WITHOUT WRITTEN PERMISSION.
COPYRIGHT ©1974 DIGITAL EQUIPMENT CORPORATION"

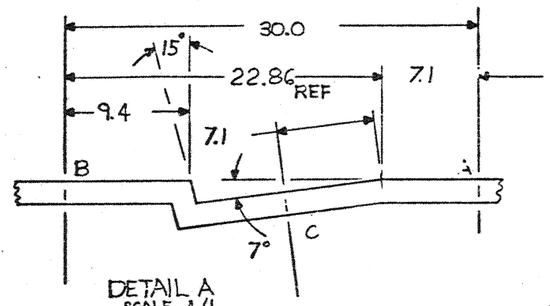

DETAIL A
SCALE 4/1

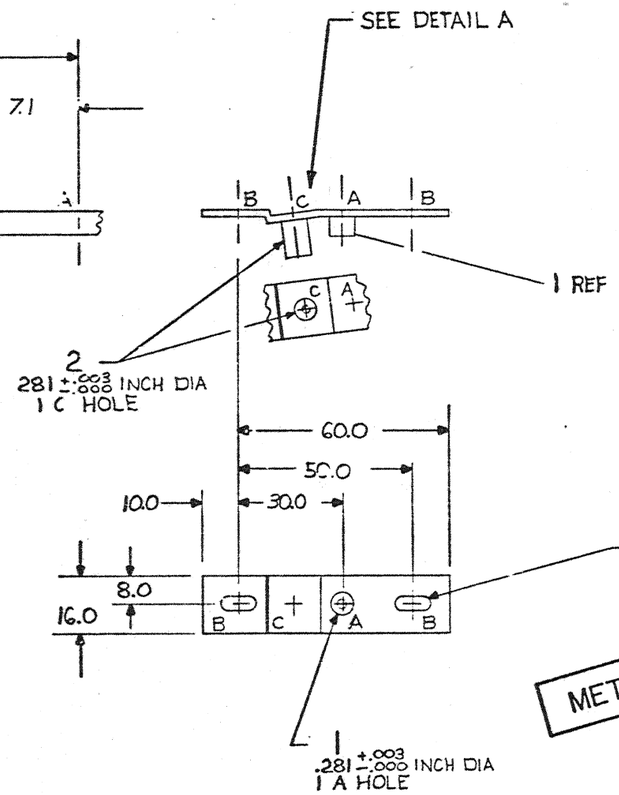

METRIC DIMENSIONS

ITEM NO.	QTY.	DESCRIPTION	PART NO.	
		PARTS LIST		
1	1	STANDOFF #8-32-16	9009108-2	2
2	1	STANDOFF #8-32-10	9009108-0	1

FIRST USED ON OPTION/MODEL: VT50

DIMENSIONAL TOLERANCE

DIMENSIONS ARE MILLIMETERS / INCHES UNLESS OTHERWISE SPECIFIED

MILLIMETERS	INCHES	ANGLES
XXX ±0,10	~~XXX ±.005~~	±0° 30'
XX ±0,5	~~XX ±.02~~	
X ±2,	~~X ±.1~~	

THIRD ANGLE PROJECTION

REMOVE BURRS AND BREAK SHARP CORNERS SURFACE QUALITY ✓

MATERIAL: 1/16 INCH THK ALUM

FINISH: 9200200-CO

		DATE
DRN.	[illegible]	7/1/74
CHK'D.	R. Viola	2/3/75
ENG.	R. Viola	2/3/75
PROJ. ENG.	[illegible]	2/3/75
PROD.	[illegible]	2/4/75

NEXT HIGHER ASSY.: Ø-UA-VT5Ø-Ø-Ø

SCALE 1/1

SHEET 1 OF 1

digital

TITLE: BRKT, PC BD TO CRT BRKT (LEFT)

SIZE	CODE	NUMBER	REV.
C	IA	7413324-0-0	

DIST.

REVISIONS

REV.	CHANGE NO.	CHK

DEC FORM NO. DNC 100-B

"THIS DRAWING AND SPECIFICATIONS, HEREIN, ARE THE PROPERTY OF DIGITAL EQUIPMENT CORPORATION AND SHALL NOT BE REPRODUCED OR COPIED OR USED IN WHOLE OR IN PART AS THE BASIS FOR THE MANUFACTURE OR SALE OF ITEMS WITHOUT WRITTEN PERMISSION.
COPYRIGHT ©1974 DIGITAL EQUIPMENT CORPORATION"

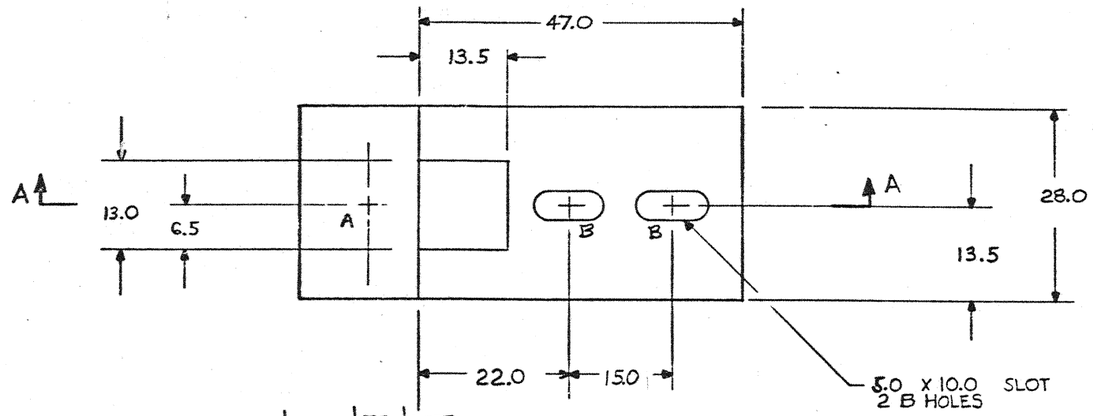

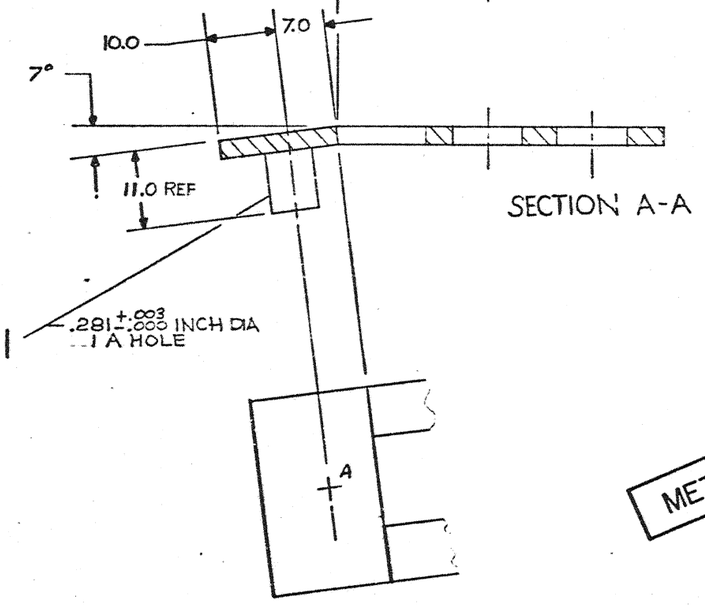

METRIC DIMENSIONS

ITEM NO.	PART NO.	DESCRIPTION	QTY.
1	9009108-1	STANDOFF #8-32-14	1

PARTS LIST

FIRST USED ON OPTION/MODEL	VT50	
DIMENSIONAL TOLERANCE	DIMENSIONS ARE MILLIMETERS / INCHES UNLESS OTHERWISE SPECIFIED	
MILLIMETERS	INCHES	ANGLES
XXX = ±0,10	.XXX = ±.005	±0° 30'
XX = ±0,5	.XX = ±.02	
X = ±2,	.X = ±.1	
THIRD ANGLE PROJECTION	REMOVE BURRS AND BREAK SHARP CORNERS SURFACE QUALITY ✓	
MATERIAL	1/16 INCH THK ALUM	
FINISH	9200200-00	

DRN.		DATE 5/1..14
CHK'D.		DATE 2/3/75
ENG.		DATE 2/3/75
PROJ. ENG.		DATE 2/3/75
PROD.		DATE 2-..75
NEXT HIGHER ASSY.	Ø-UA-VT5Ø-Ø-Ø	
SCALE	2/1	
SHEET	1 OF 1	

digital

TITLE: BRKT PC BD TO SHELL

SIZE	CODE	NUMBER	REV.
C	IA	7413326-0-0	

DIST.

REVISIONS	REV.
CHANGE NO.	
CHK	

SIZE C CODE IA NUMBER 7413326-0-0 REV.

DEC FORM NO. DEC 100-B

"THIS DRAWING AND SPECIFICATIONS, HEREIN, ARE THE PROPERTY OF DIGITAL EQUIPMENT CORPORATION AND SHALL NOT BE REPRODUCED OR COPIED OR USED IN WHOLE OR IN PART AS THE BASIS FOR THE MANUFACTURE OR SALE OF ITEMS WITHOUT WRITTEN PERMISSION.
COPYRIGHT ©1975, DIGITAL EQUIPMENT CORPORATION"

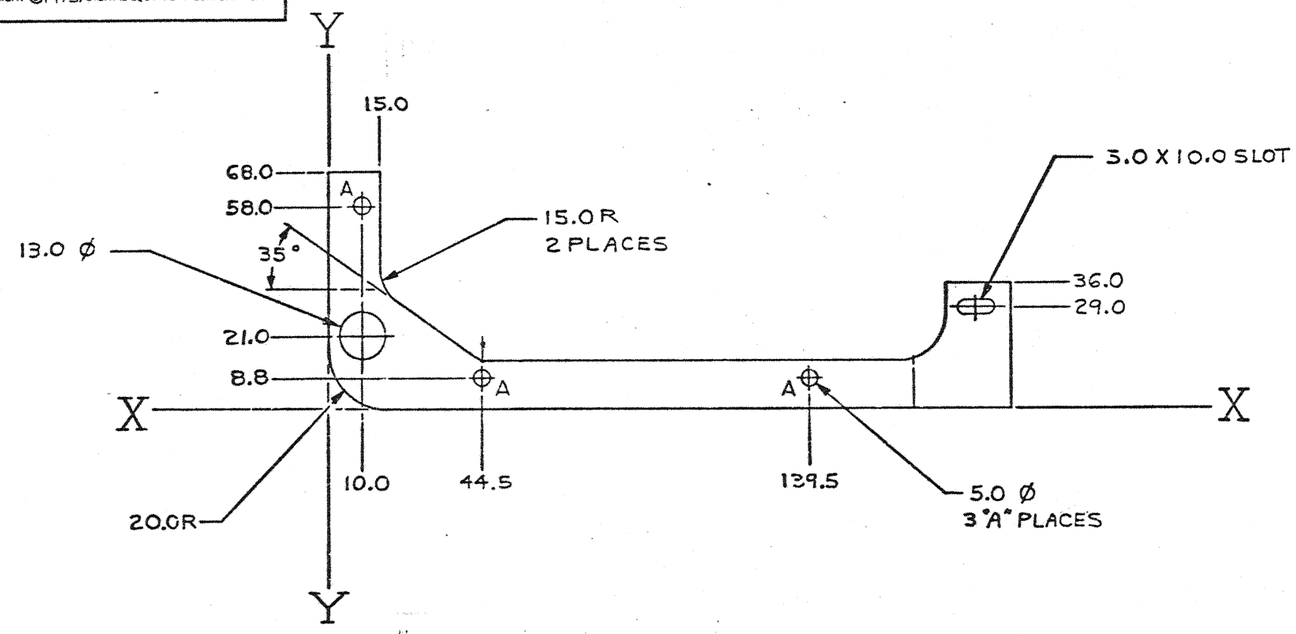

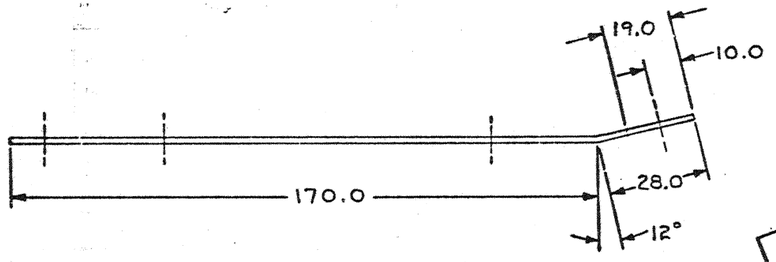

METRIC DIMENSIONS

DESCRIPTION	DWG./PART NO.	ITEM NO.

UNLESS OTHERWISE SPECIFIED DIMENSIONS ARE IN MILLIMETERS

ANGLES ±0° 30'	CLASS OF ACCURACY (CHECK ONE)	NOMINAL DIMENSION RANGE MILLIMETER					
		OVER 1 TO 5	OVER 5 TO 30	OVER 30 TO 100	OVER 100 TO 300	OVER 300 TO 1000	OVER 1000 TO 2000
SURFACE QUALITY IN MICROINCHES	MEDIUM	±0.1	±0.2	±0.3	±0.4	±0.6	±1.0
	PREFERRED	±0.3	±0.4	±0.6	±1.0	±1.6	±2.5

QUANTITY & VARIATION

THIRD ANGLE PROJECTION

REMOVE BURRS AND BREAK SHARP CORNERS

DO NOT SCALE DWG

MATERIAL 1.5 THK. (.062) CRS

FINISH 9200120-94

DRN.	D.C. Olson	1/10/75
CHK'D	R. Girard	2/3/75
ENG.	R. Girard	2/3/75
PROJ. ENG.	[illegible]	2/3/75
PROD.	[illegible]	[illegible]

NEXT HIGHER ASSY. D-UA-VT5Ø-Ø-Ø

SCALE 1/1

SHEET 1 OF 1

FIRST USED ON VT5Ø

digital

TITLE MTG. BRACKET KYBD RIGHT

SIZE	CODE	NUMBER	REV.
2	MD	7413327-0-0	

DIST.

REVISIONS

CHK	CHANGE NO.	REV.

DEC FORM NO. DA2-120

2 MD 7413327-0-0

"THIS DRAWING AND SPECIFICATIONS, HEREIN, ARE THE PROPERTY OF DIGITAL EQUIPMENT CORPORATION AND SHALL NOT BE REPRODUCED OR COPIED OR USED IN WHOLE OR IN PART AS THE BASIS FOR THE MANUFACTURE OR SALE OF ITEMS WITHOUT WRITTEN PERMISSION.
COPYRIGHT © 1975, DIGITAL EQUIPMENT CORPORATION"

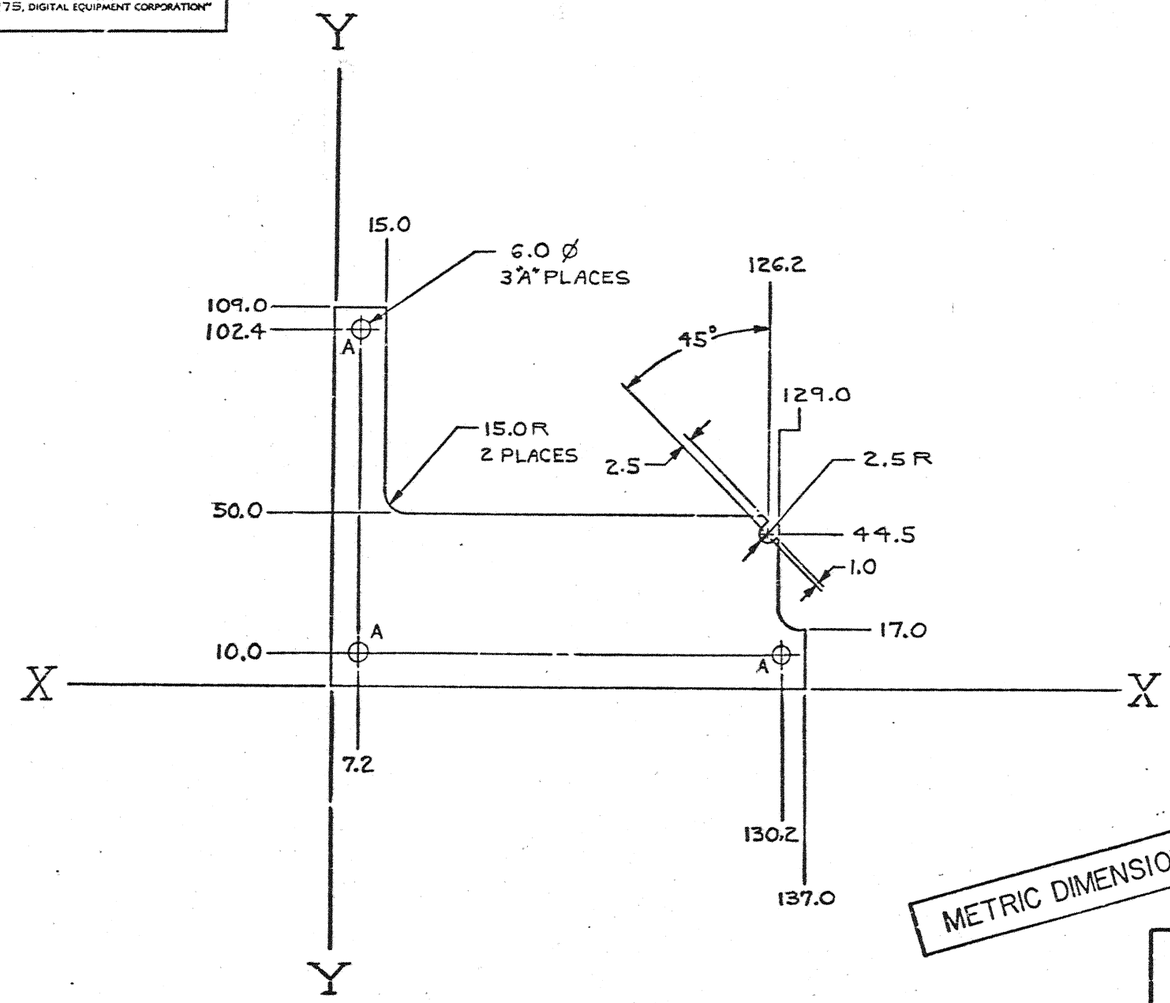

METRIC DIMENSIONS

DESCRIPTION	DWG PART NO.	ITEM NO.

UNLESS OTHERWISE SPECIFIED DIMENSIONS ARE IN MILLIMETERS

ANGLES ±0° 30'

SURFACE QUALITY IN MICROINCHES

CLASS OF ACCURACY (CHECK ONE)

NOMINAL DIMENSION RANGE MILLIMETER	OVER 1 TO 5	OVER 5 TO 30	OVER 30 TO 100	OVER 100 TO 300	OVER 300 TO 1000	OVER 1000 TO 2000
MEDIUM	±0.1	±0.2	±0.3	±0.4	±0.6	±1.0
PREFERRED	±0.3	±0.4	±0.6	±1.0	±1.6	±2.5

QUANTITY & VARIATION

THIRD ANGLE PROJECTION

REMOVE BURRS AND BREAK SHARP CORNERS

DO NOT SCALE DWG

MATERIAL 1.5 THK. (.062) CRS

FINISH S200120-94

DRN. D.E. Olson 1/9/75
CHK'D 2/3/75
ENG. 2/3/75
PROJ. ENG. 2/3/75
PROD. 2/3/75

NEXT HIGHER ASSY. Ø UA-VT5Ø-Ø-Ø

SCALE 1/1

SHEET 1 OF 1

FIRST USED ON VT5Ø

digital

TITLE MTG. BRACKET KYBD LEFT

SIZE	CODE	NUMBER	REV.
2	MD	7413328-0-0	

DIST.

REVISIONS: CHK | CHANGE NO. | REV.

DEC FORM NO. DA2-120

2 MD 7413328-0-0

"THIS DRAWING AND SPECIFICATIONS, HEREIN, ARE THE PROPERTY OF DIGITAL EQUIPMENT CORPORATION AND SHALL NOT BE REPRODUCED OR COPIED OR USED IN WHOLE OR IN PART AS THE BASIS FOR THE MANUFACTURE OR SALE OF ITEMS WITHOUT WRITTEN PERMISSION.
COPYRIGHT © 1975 DIGITAL EQUIPMENT CORPORATION"

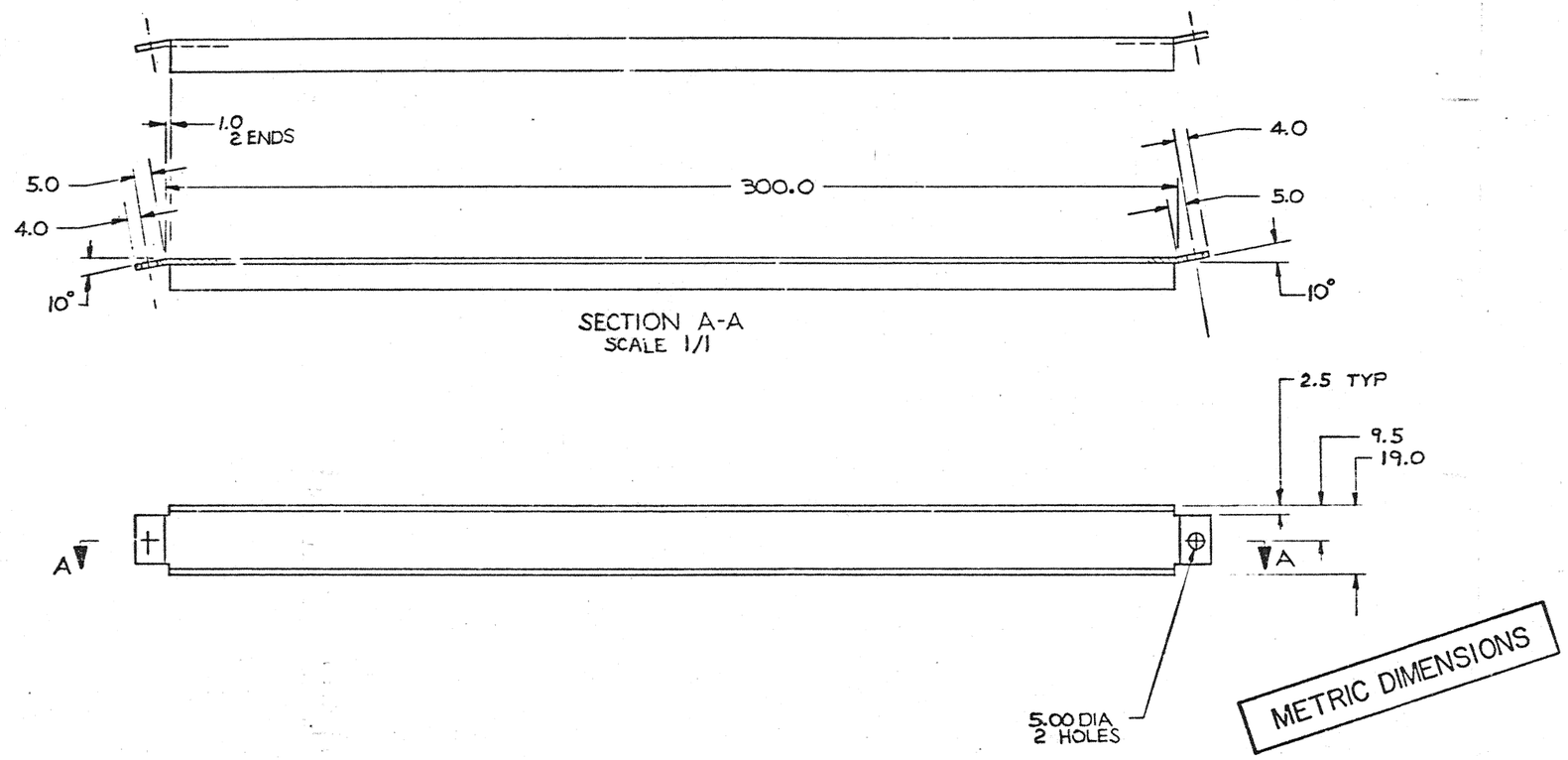

FIRST USED ON OPTION/MODEL	QTY.	DESCRIPTION	PART NO.	ITEM NO.
VT5Ø		PARTS LIST		

DIMENSIONAL TOLERANCE

DIMENSIONS ARE MILLIMETERS / INCHES UNLESS OTHERWISE SPECIFIED

MILLIMETERS	INCHES	ANGLES
X.XX = ± 0,10 X.X = ± 0,5 X = ± 2,	~~.XXX = ± .005~~ ~~.XX = ± .02~~ ~~X = ± .1~~	±0° 30'

THIRD ANGLE PROJECTION

REMOVE BURRS AND BREAK SHARP CORNERS SURFACE QUALITY ✓

MATERIAL 1/16 INCH THK ALUMINUM

FINISH 9200200-00

		DATE
DRN.	[signature]	3 Jan 75
CHK'D.	R. Lind	2/3/75
ENG.	R. Lind	2/3/75
PROJ. ENG.	[signature]	2/3/75
PROD.	[signature]	2-3-75

NEXT HIGHER ASSY. Ø-UA-VT5Ø-Ø-Ø

SCALE 1/1

SHEET 1 OF 1

digital

TITLE BRACKET, COPIER WELL

SIZE	CODE	NUMBER	REV.
C	MD	7413400-0-0	

DIST.

REVISIONS: REV. | CHANGE NO. | CHK

DEC FORM NO. DRC 100-B

"THIS DRAWING AND SPECIFICATIONS, HEREIN, ARE THE PROPERTY OF DIGITAL EQUIPMENT CORPORATION AND SHALL NOT BE REPRODUCED OR COPIED OR USED IN WHOLE OR IN PART AS THE BASIS FOR THE MANUFACTURE OR SALE OF ITEMS WITHOUT WRITTEN PERMISSION.
COPYRIGHT ©1978, DIGITAL EQUIPMENT CORPORATION"

LEGEND "A"

SECTION	SHEET TAKEN	SHEET SHOWN	SECTION	SHEET TAKEN	SHEET SHOWN	SECTION	SHEET TAKEN	SHEET SHOWN
AA-AA	1	6	BA-BA	5	9	CA-CA	7	7
AB-AB	1	7	BB-BB	5	9	CB-CB	7	7
AC-AC	1	11	BC-BC	5	9	CC-CC	7	7
AD-AD	2	2	BD-BD	5	9	CD-CD	7	7
AE-AE	2	2	BE-BE	5	9	CE-CE	7	7
AF-AF	2	2	BF-BF	5	9	CF-CF	10	8
AG-AG	2	2	BG-BG	5	9	CG-CG	10	8
AH-AH	2	2	BH-BH	5	9	CH-CH	10	8
AI-AI	2	9	BI-BI	5	9	CI-CI	10	8
AJ-AJ	2	10	BJ-BJ	5	9	CJ-CJ	10	8
AK-AK	2	10	BK-BK	5	11	CK-CK	10	10
AL-AL	2	4	BL-BL	5	11	CL-CL	10	10
AM-AM	2	5	BM-BM	5	11	CM-CM	10	10
AN-AN	4	4	BN-BN	5	11	CN-CN	10	10
AO-AO	4	4	BO-BO	5	9	CO-CO	10	10
AP-AP	5	5	BP-BP	5	9	CP-CP	10	10
AQ-AQ	5	5	BQ-BQ	5	9	CQ-CQ	10	10
AR-AR	5	5	BR-BR	5	9	CR-CR	10	10
AS-AS	5	5	BS-BS	5	9	CS-CS	3	3
AT-AT	5	5	BT-BT	5	9			
AU-AU	5	3	BU-BU	5	9			
AV-AV	5	9	BV-BV	5	11			
AW-AW	5	3	BW-BW	5	11			
AX-AX	5	3	BX-BX	5	11			
AY-AY	5	3	BY-BY	7	7			
AZ-AZ	5	3	BZ-BZ	7	7			

LEGEND "B"

VIEW	SHEET TAKEN	SHEET SHOWN
A-A	1	1
B-B	1	1
C-C	1	1
D-D	1	1
E-E	1	2
F-F	1	3
G-G	1	4
H-H	1	5
I-I	1	3
J-J	2	2
K-K	2	2
L-L	2	2
M-M	3	3
N-N	5	5
O-O	5	5
P-P	10	10
Q-Q	10	10

LEGEND "C"

DETAIL	SHEET TAKEN	SHEET SHOWN
A	—	—
B	1	1
C	1	1
D	1	1
E	5	5
F	5	5
G	5	5
H	5	5
I	5	5
J	5	5
K	5	5
L	5	5
M	5	5
N	5	5
O	5	5
P	5	5
Q	5	5
R	5	5
S	5	5
T	5	5
U	5	5
V	5	5
W	5	5
X	5	5
Y	5	5
Z	5	5
AA	5	5
AB	5	5
AC	5	5
AD	5	5
AE	5	5
AF	5	5
AG	5	5
AH	5	5
AI	5	5
AJ	5	5
AK	5	5
AL	5	5
AM	5	5
AN	5	5
AO	5	5
AP	5	5
AQ	5	5
AR	5	5
AS	5	5

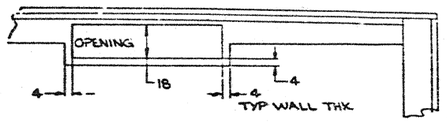

VIEW A-A

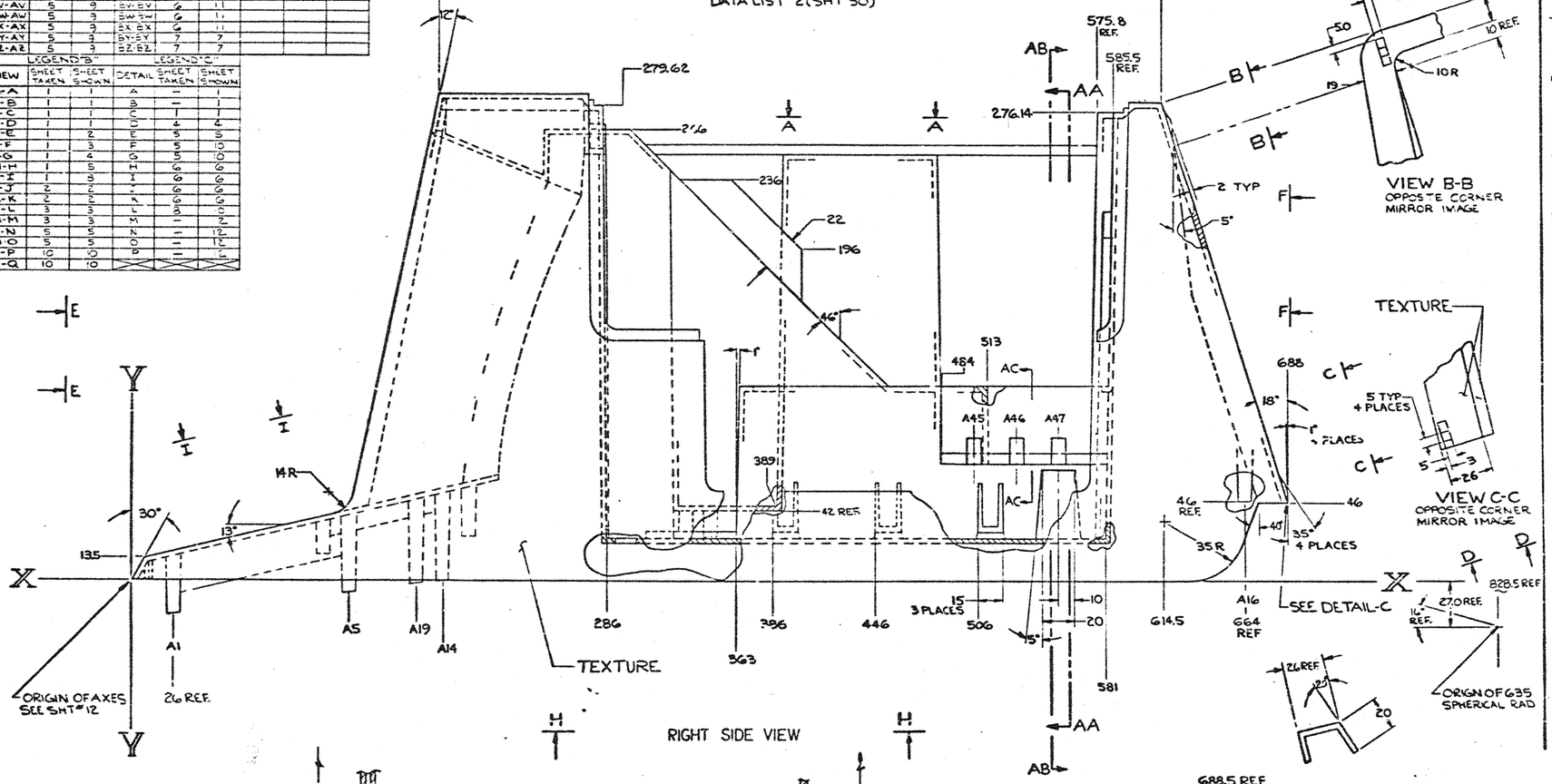

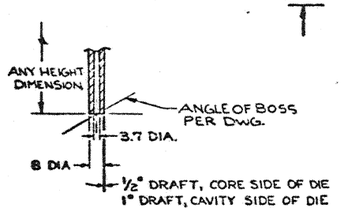

TYPICAL BOSS DETAIL-A
SCALE: 1/1
[ALL CORED HOLES TO BE CORED FROM BOTTOM]

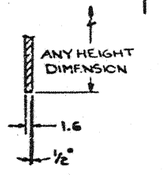

TYPICAL RIB DETAIL-B
SCALE: 2/1

DETAIL-C
SCALE: NONE

NOTES:

1. ALL DIMENSIONS ARE MILLIMETERS AND NOMINAL. UNLESS OTHERWISE SPECIFIED, DRAFT WILL BE CORE SIDE: ½°; CAVITY SIDE: 1°
2. NOMINAL WALL THICKNESS: 4 MM (0.156 INCH)
3. CORNERS ARE SHOWN SHARP FOR DRAFTING PURPOSES ONLY. THE FOLLOWING RADII ARE ALLOWABLE FOR TOOLING:
   A. FILLETS AND ROUNDS OF ALL BOSSES AND RIBS - 0.5R MAX
   B. GENERAL FILLET RADII: 0.12 MM MIN 1.5 MM MAX.
   C. OUTSIDE CORNER RADII: 0.7 MM MIN. 1.2 MM MAX
   D. EXTERNAL APPERANCE SURFACES - 0.5/0.8R
   E. SLIDE PARTING LINE - 1.5R (SEE SHEET #2)
4. MATERAL TO BE GENERAL ELECTRIC NORYL #SE-100-7342
5. TEXTURE TO BE AKRON METALS ETCHING #E-496
6. AXES PER CARTESIAN COORDINATES, ALL DIMENSIONS RELATE TO AXES, NOT TO DATUM PLANES. A DATUM PLANE IN THIS DWG IS DEFINED BY ANY TWO OF THE THREE AXES.
7. FOR INFORMATION RELATED TO PROFILE OF SHELL AND ORIENTATION OF AXES SEE SHEET #12.
8. TOLERANCES:
   GENERAL ± 0.1 MM FIRST 25 MM, PLUS ± 0.02 MM PER ADDITIONAL CM OR FRACTION
   PARTING LINE ± 0.13 MM FIRST 25 MM PLUS ± 0.02 MM PER ADDITIONAL CM OR FRACTION
   PIN MARKS ACCEPTABLE TO 0.0 RAISED; 0.5 MM DEPRESED
   SOLID PIN MARK FLASH ACCEPTABLE TO 0.08 MM MAXIMUM
   FLASH PERMITTED TO 0.08 MM MAXIMUM
9. ALL BOSSES TO BE CORED FROM BOTTOM.
10. THE FOLLOWING BOSSES MUST BE CORED THRU.
    A. A27, A28, A29, A31 THRU A36, A38, A39, A40, A47, A42, A45, A46, A47, A50 THRU A53
    B. B1, B2 & B3
    C. C1 THRU C16
    D. D1 THRU D11
    E. F1 THRU F12.
11. THE FOLLOWING BOSSES MAY NOT BE CORED THRU.
    A. A1 THRU A21 & A53
    B. ANY REMAINING BOSSES MAY OR MAY NOT BE CORED THRU.

FIRST USED ON OPTION/MODEL: VT50	QTY.	DESCRIPTION	PART NO.	ITEM NO.
DIMENSIONAL TOLERANCE UNLESS OTHERWISE SPECIFIED: MILLIMETERS ANGLES .X ±1.0 .XX ±0.5 .XXX ±0.2 ±30'	PARTS LIST			
THIRD ANGLE PROJECTION	DRAWN	DATE	digital	
	CHK'D	DATE		
	ENG.	DATE		
	PROJ ENG.	DATE	TITLE: SHELL VT50	
	PROD.	DATE		
REMOVE ALL BURRS AND BREAK SHARP CORNERS SURFACE QUALITY ✓				
MATERIAL: SEE NOTE #4			SIZE: VT50-0-0	CODE: E MD
FINISH: SEE NOTE #5			SCALE: 1/1	NUMBER: 7411540-0-0
			SHEET 1 OF 25	REV: A
				DIST:

7411540-0-0 A

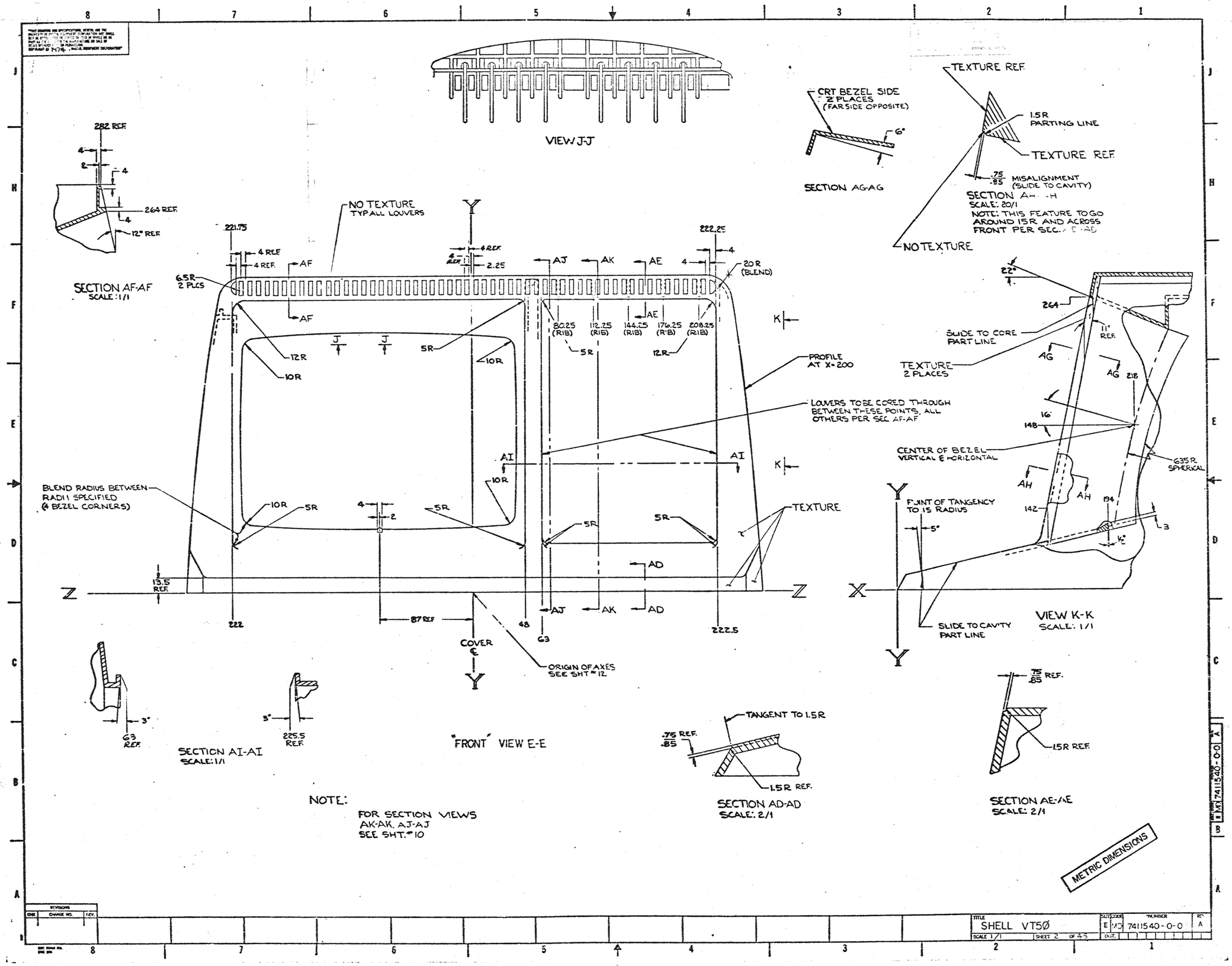
VIEW J-J
CRT BEZEL SIDE 2 PLACES (FAR SIDE OPPOSITE)
SECTION AG-AG
TEXTURE REF.
1.5R PARTING LINE
TEXTURE REF.
.75 .85 MISALIGNMENT (SLIDE TO CAVITY)
SECTION AH-AH
SCALE: 20/1
NOTE: THIS FEATURE TO GO AROUND 15R AND ACROSS FRONT PER SEC. AD-AD
NO TEXTURE
282 REF.
264 REF.
12° REF.
SECTION AF-AF
SCALE: 1/1
NO TEXTURE TYP ALL LOUVERS
221.75
222.25
4 REF.
6.5R 2 PLCS
20R (BLEND)
80.25 (R18)
112.25 (R18)
144.25 (R18)
176.25 (R18)
208.25 (R18)
PROFILE AT X=200
LOUVERS TO BE CORED THROUGH BETWEEN THESE POINTS, ALL OTHERS PER SEC AF-AF
BLEND RADIUS BETWEEN RADII SPECIFIED (4 BEZEL CORNERS)
TEXTURE
13.5 REF.
87 REF.
COVER ℄
ORIGIN OF AXES SEE SHT #12
SLIDE TO CORE PART LINE
TEXTURE 2 PLACES
CENTER OF BEZEL VERTICAL & HORIZONTAL
635R SPHERICAL
POINT OF TANGENCY TO 15 RADIUS
SLIDE TO CAVITY PART LINE
VIEW K-K
SCALE: 1/1
SECTION AI-AI
SCALE: 1/1
63 REF.
225.5 REF.
"FRONT" VIEW E-E
TANGENT TO 1.5R
1.5R REF.
SECTION AD-AD
SCALE: 2/1
.75 .85 REF.
1.5R REF.
SECTION AE-AE
SCALE: 2/1
NOTE:
FOR SECTION VIEWS AK-AK, AJ-AJ SEE SHT. #10
METRIC DIMENSIONS
SHELL VT5Ø
SCALE 1/1
SHEET 2 OF 45
7411540-0-0
A

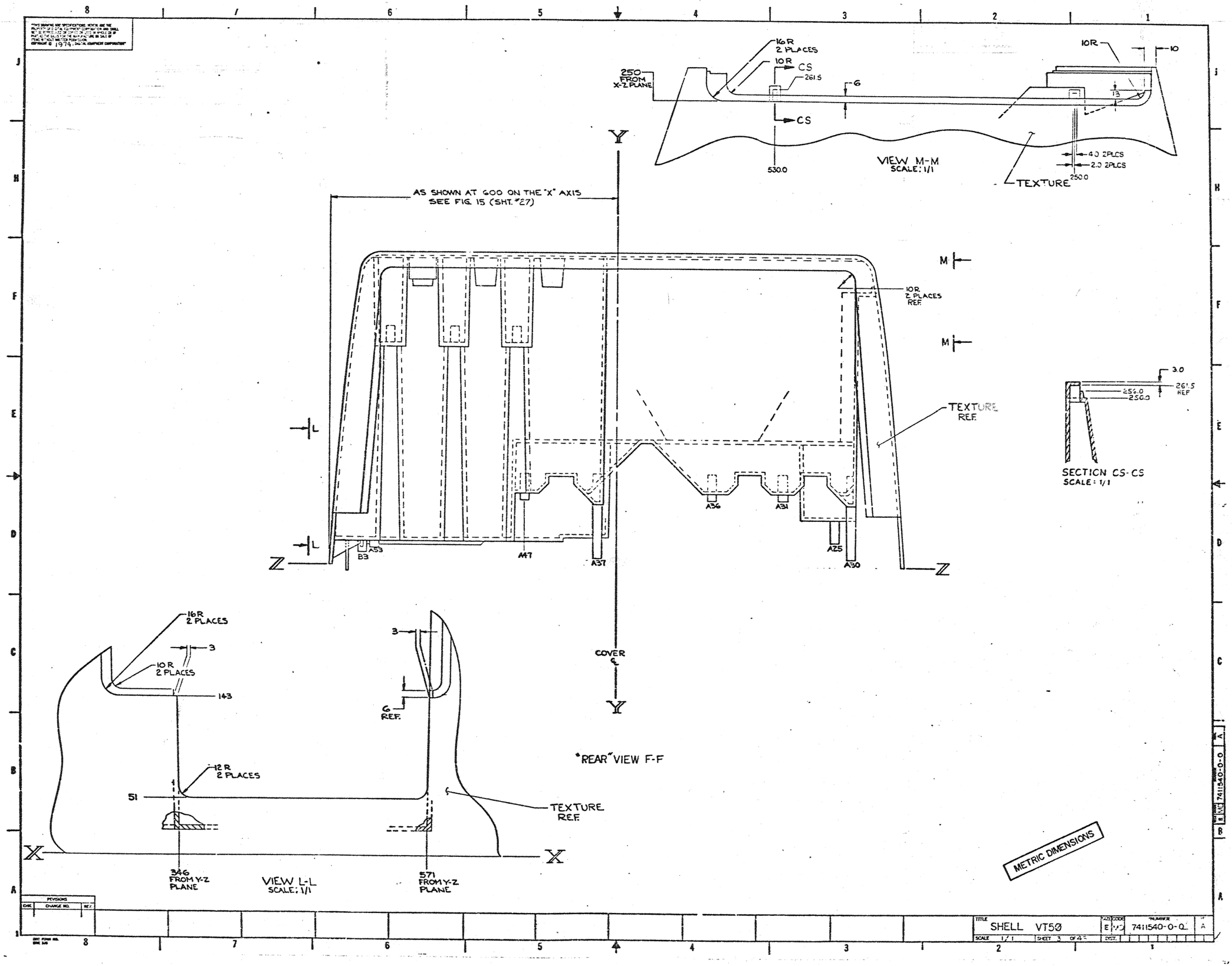

16R
2 PLACES
10R
CS
261.5
250
FROM
X-Z PLANE
6
CS
530.0
VIEW M-M
SCALE: 1/1
10R
10
13
4.0 2PLCS
2.0 2PLCS
250.0
TEXTURE
AS SHOWN AT 600 ON THE "X" AXIS
SEE FIG. 15 (SHT. #27)
Y
M
M
10R
2 PLACES
REF
TEXTURE
REF
L
L
Z
Z
B3
A53
A47
A37
A36
A31
A25
A30
3.0
261.5
REF
256.0
250.0
SECTION CS-CS
SCALE: 1/1
COVER
℄
Y
16R
2 PLACES
3
10R
2 PLACES
143
3
6
REF.
12R
2 PLACES
51
TEXTURE
REF.
X
X
346
FROM Y-Z
PLANE
VIEW L-L
SCALE: 1/1
571
FROM Y-Z
PLANE
"REAR" VIEW F-F
METRIC DIMENSIONS
PEVISIONS
CHK
CHANGE NO.
REV
TITLE
SHELL VT50
SIZE
E
CODE
MD
NUMBER
7411540-0-0
A
SCALE 1/1
SHEET 3 OF 4
DIST.

THIS DRAWING AND SPECIFICATIONS, AS WELL AS THE PROPERTY OF DIGITAL EQUIPMENT CORPORATION AND SHALL NOT BE REPRODUCED OR COPIED OR USED IN WHOLE OR IN PART AS THE BASIS FOR THE MANUFACTURE OR SALE OF ITEMS WITHOUT WRITTEN PERMISSION.
COPYRIGHT © 1974 DIGITAL EQUIPMENT CORPORATION

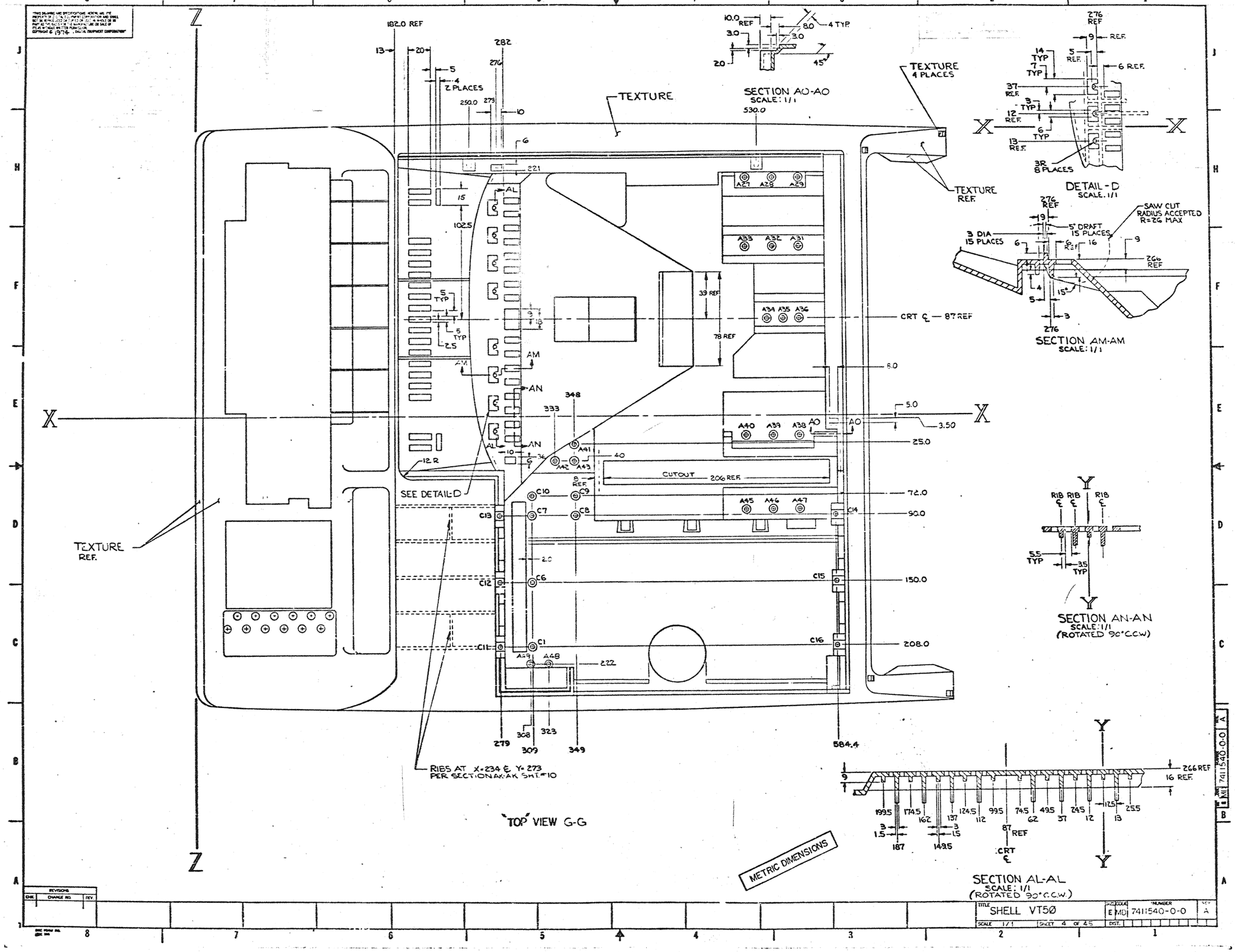

DETAIL-E
SCALE: 2/1

SECTION AS-AS

SECTION AR-AR

SECTION AT-AT

VIEW N-N
SCALE: NONE

*BOTTOM VIEW H-H

VIEW O-O
SCALE: NONE

SECTION AQ-AQ

SECTION AP-AP

METRIC DIMENSIONS

REVISIONS		
DIR	CHANGE NO.	REV.

TITLE	SIZE/CODE	NUMBER	REV
SHELL VT5Ø	E 71:0	741540-0-0	A
SCALE 1/1	SHEET 5 OF 45	DST.	

THESE DRAWINGS AND SPECIFICATIONS, AS NOTED, ARE THE PROPERTY OF CATERPILLAR EQUIPMENT CORPORATION AND SHALL NOT BE REPRODUCED OR COPIED OR USED AS BASIS FOR THE MANUFACTURE OR SALE OF ITEMS WITHOUT WRITTEN PERMISSION.
COPYRIGHT © 1974 - CATERPILLAR EQUIPMENT CORPORATION

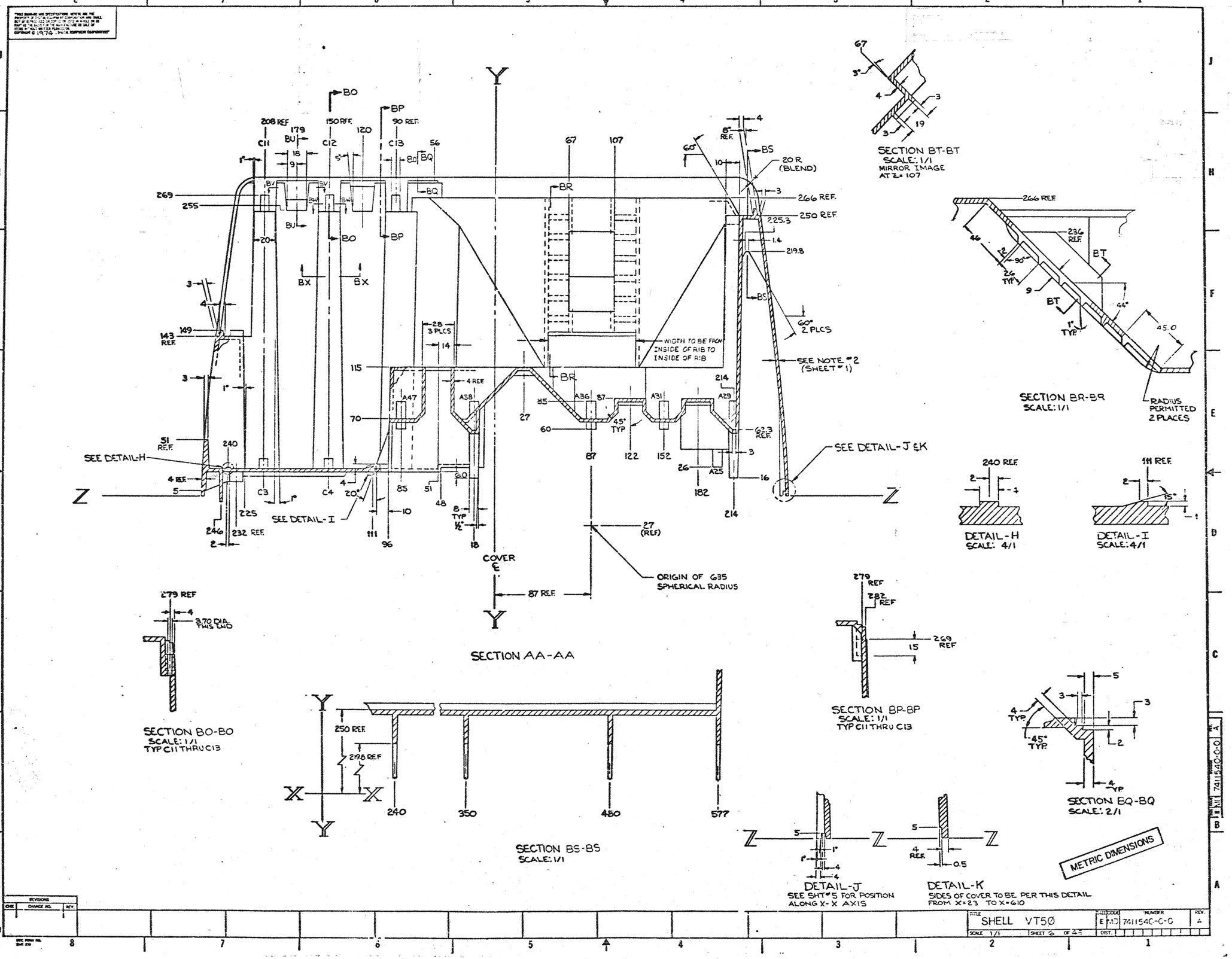

REVISIONS		
ORIG	CHANGE NO.	REV.

TITLE	SIZE CODE	NUMBER	REV.
SHELL VT50	E	7411540-C-0	A
SCALE 1/1 SHEET 6 OF 43	DIST.		

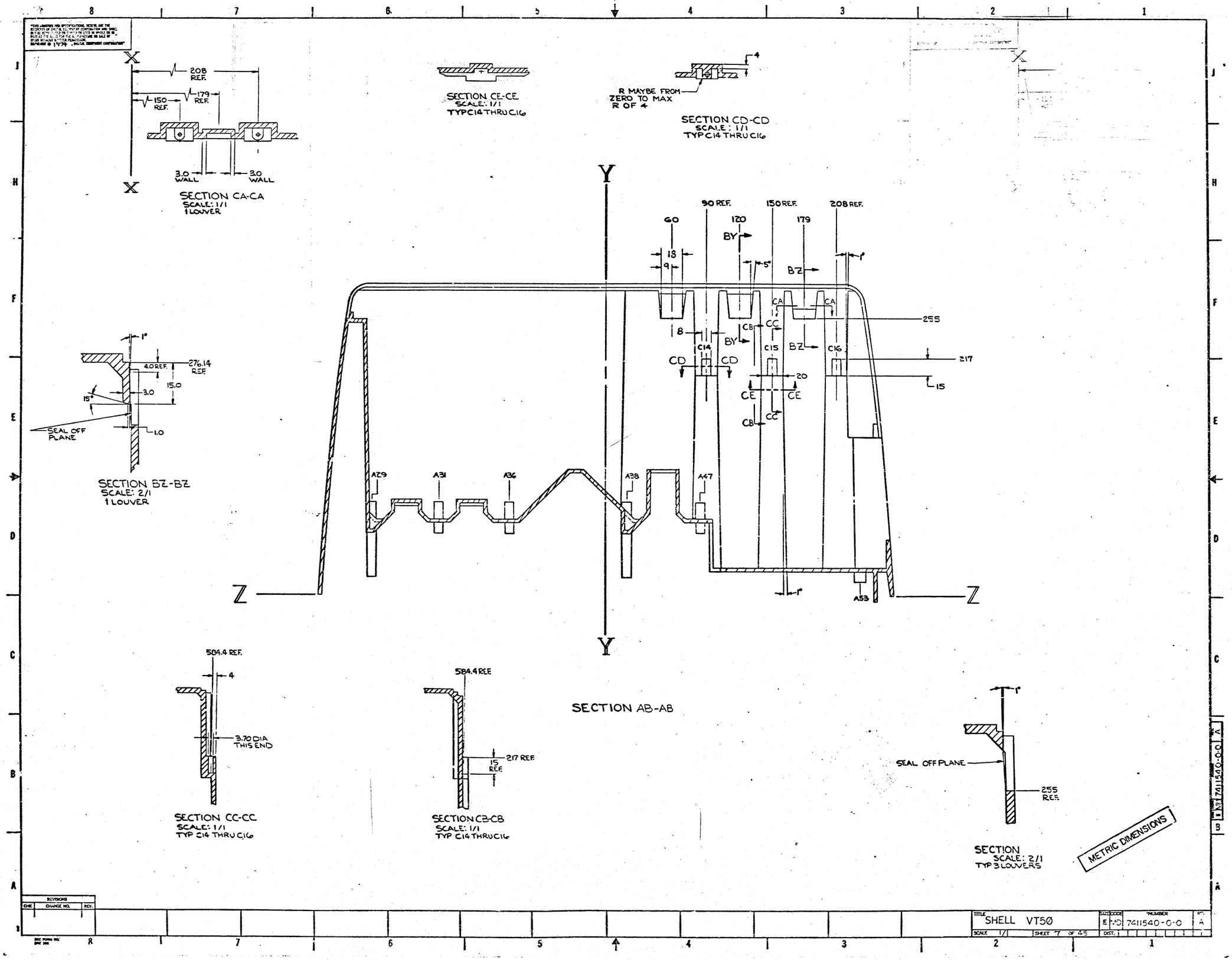

SECTION CA-CA
SCALE: 1/1
1 LOUVER
208 REF.
150 REF.
179 REF.
3.0 WALL
3.0 WALL
SECTION CE-CE
SCALE: 1/1
TYP C14 THRU C16
R MAYBE FROM ZERO TO MAX R OF 4
SECTION CD-CD
SCALE: 1/1
TYP C14 THRU C16
SECTION BZ-BZ
SCALE: 2/1
1 LOUVER
4.0 REF.
276.14 REF.
15.0
3.0
15°
SEAL OFF PLANE
1.0
SECTION AB-AB
90 REF.
150 REF.
208 REF.
60
120
179
18
9
5°
1°
255
217
15
20
8
C14
C15
C16
A29
A31
A36
A38
A47
A53
584.4 REF.
4
3.70 DIA THIS END
SECTION CC-CC
SCALE: 1/1
TYP C14 THRU C16
584.4 REF.
217 REF.
15 REF.
SECTION CB-CB
SCALE: 1/1
TYP C14 THRU C16
SEAL OFF PLANE
255 REF.
SECTION
SCALE: 2/1
TYP 3 LOUVERS
METRIC DIMENSIONS
REVISIONS
CHK
CHANGE NO.
REV.
TITLE SHELL VT50
SIZE E
CODE MD
NUMBER 7411540-0-0
REV. A
SCALE 1/1
SHEET 7 OF 45
DIST. 1

THIS DRAWING AND SPECIFICATIONS, WHETHER THE PROPERTY OF DME COMPANY, LLC OR ITS SUPPLIERS, IS CONFIDENTIAL AND SHALL NOT BE DISCLOSED TO ANY OTHER PERSON OR ENTITY WITHOUT THE WRITTEN CONSENT OF DME COMPANY, LLC. IT SHALL NOT BE USED FOR ANY PURPOSE NOT EXPRESSLY PERMITTED BY WRITTEN AGREEMENT WITH DME COMPANY, LLC. COPYRIGHT © 1974 - DME COMPANY, LLC

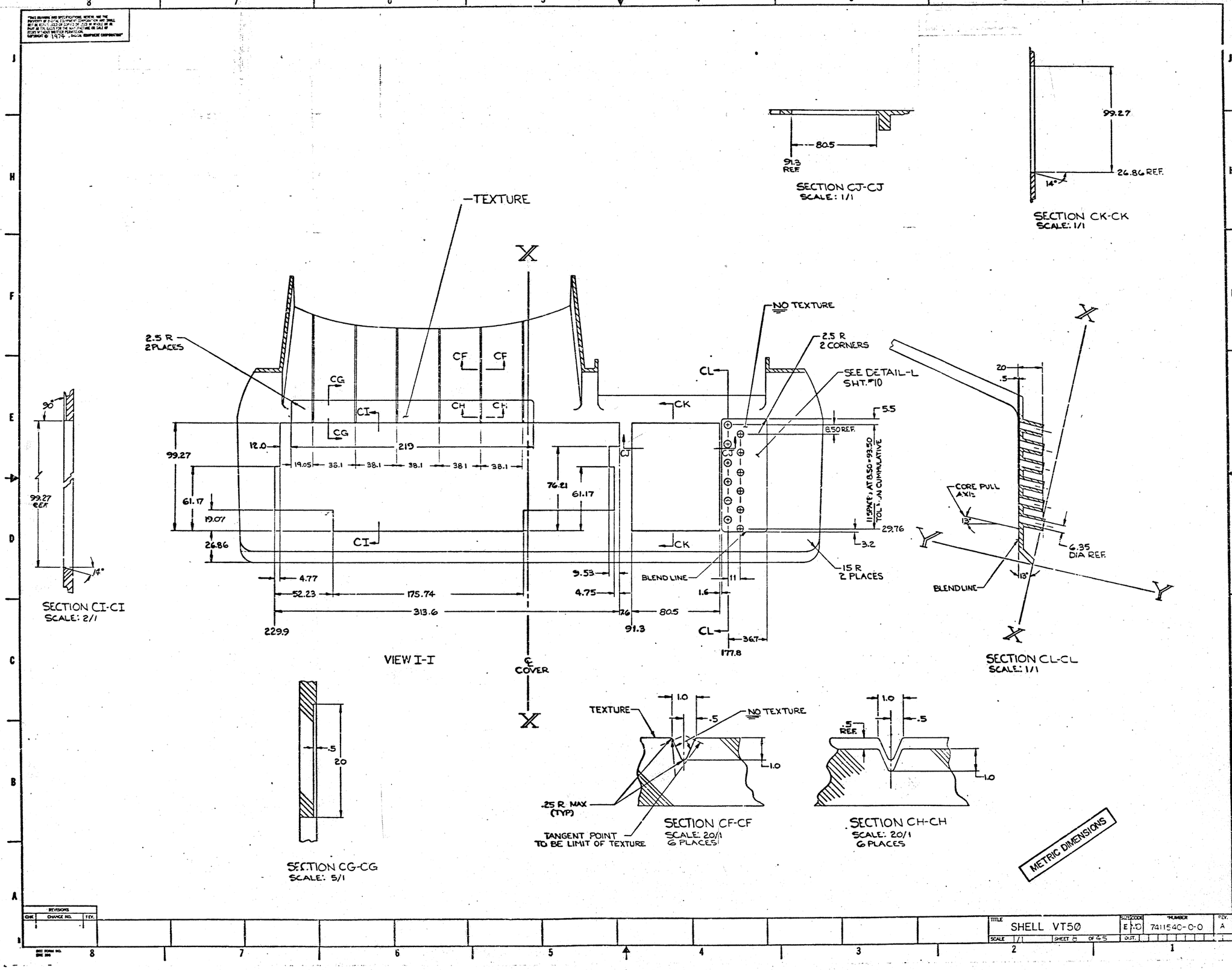

REVISIONS			
CHK	CHANGE NO.	DIV.	

TITLE	SIZE/CODE	NUMBER	REV.
SHELL VT50	E	7411540-0-0	A
SCALE 1/1	SHEET 5 OF 45	DIST.	

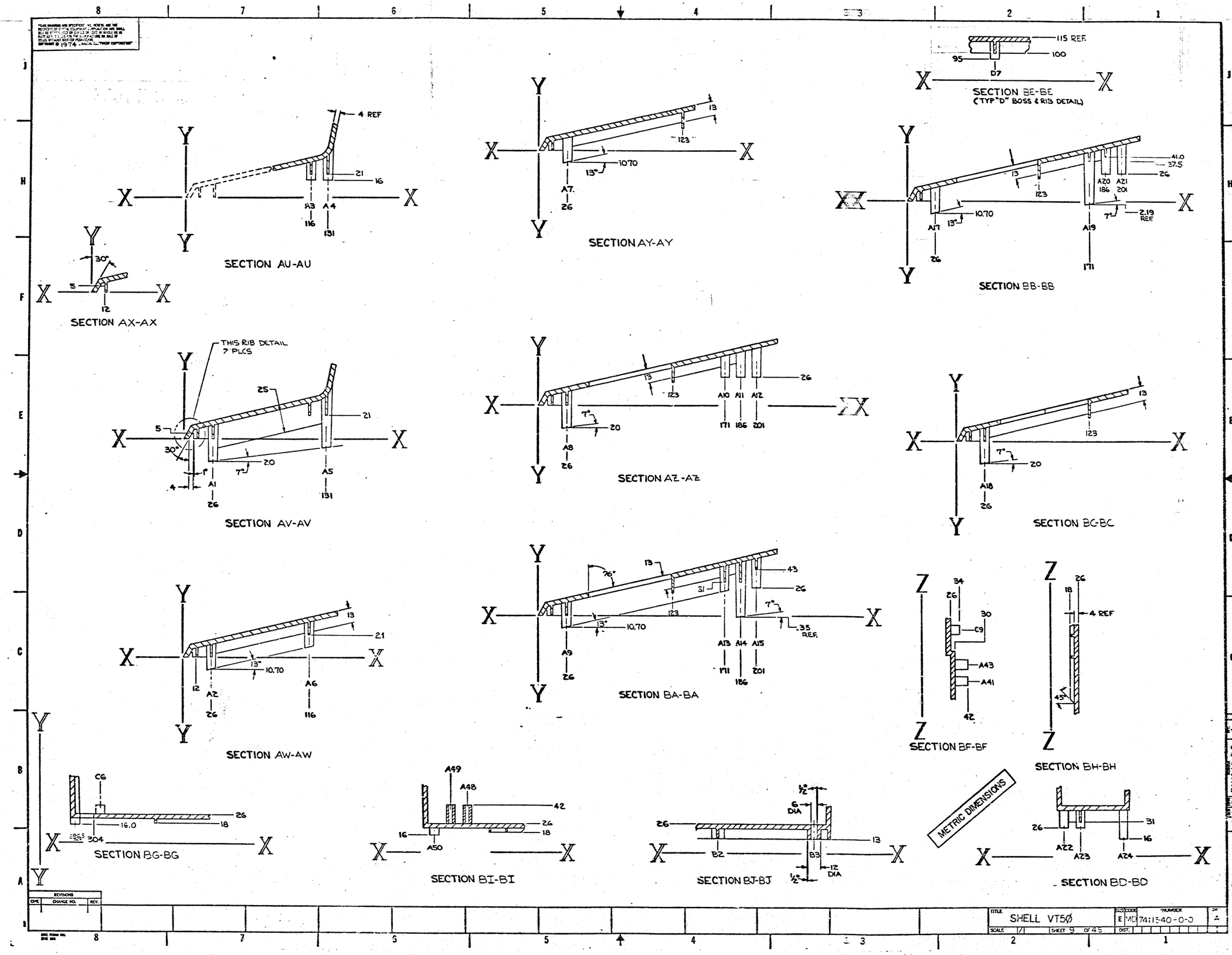
SECTION AU-AU
SECTION AX-AX
SECTION AY-AY
SECTION BE-BE
(TYP "D" BOSS & RIB DETAIL)
SECTION BB-BB
SECTION AV-AV
THIS RIB DETAIL 7 PLCS
SECTION AZ-AZ
SECTION BC-BC
SECTION AW-AW
SECTION BA-BA
SECTION BF-BF
SECTION BH-BH
SECTION BG-BG
SECTION BI-BI
SECTION BJ-BJ
SECTION BD-BD
METRIC DIMENSIONS
SHELL VT5Ø
74115-40-0-0

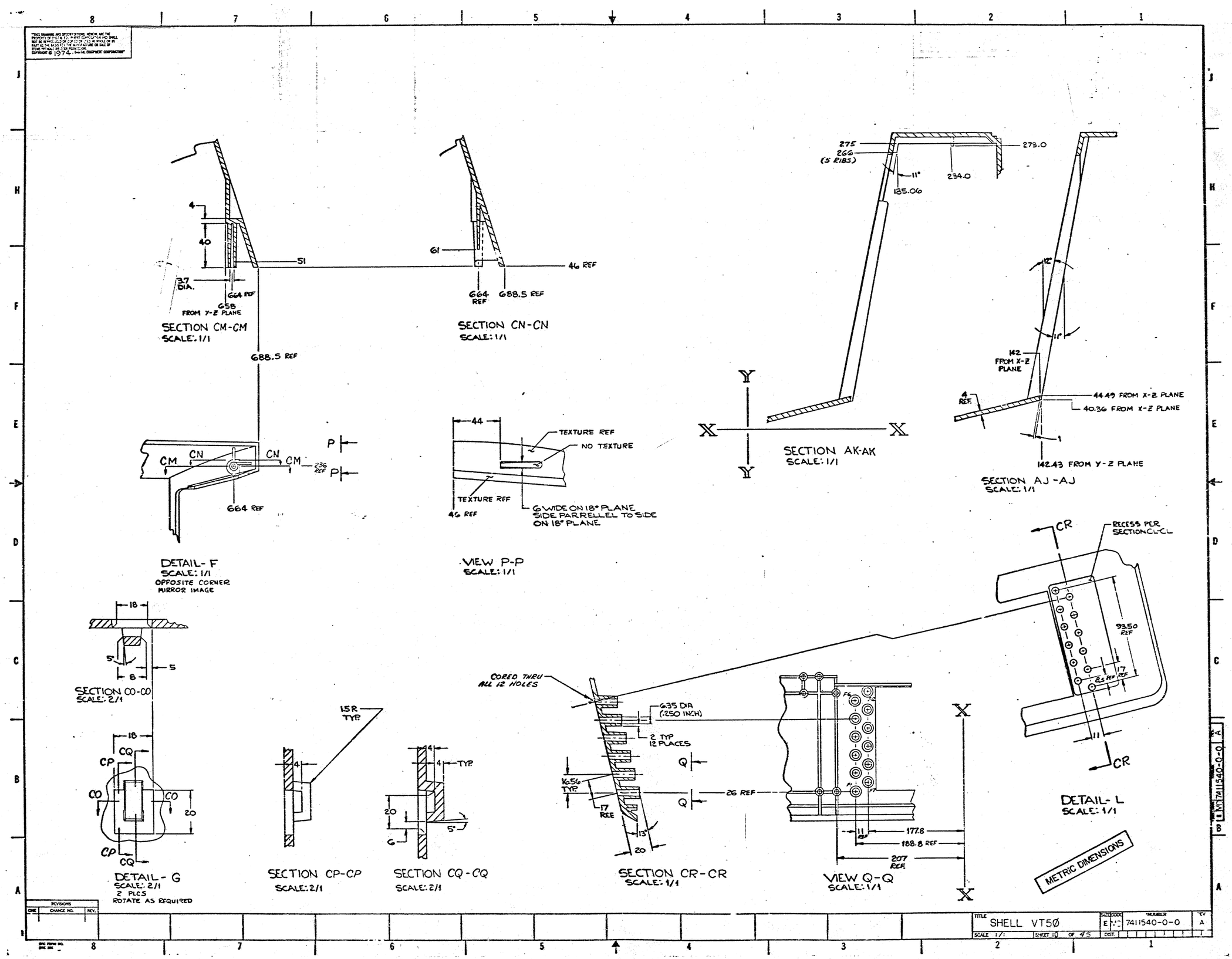

TITLE	SHELL VT5Ø	SIZE	CODE	NUMBER	REV
		E		7411540-0-0	A
SCALE 1/1	SHEET 10 OF 45	DIST.			

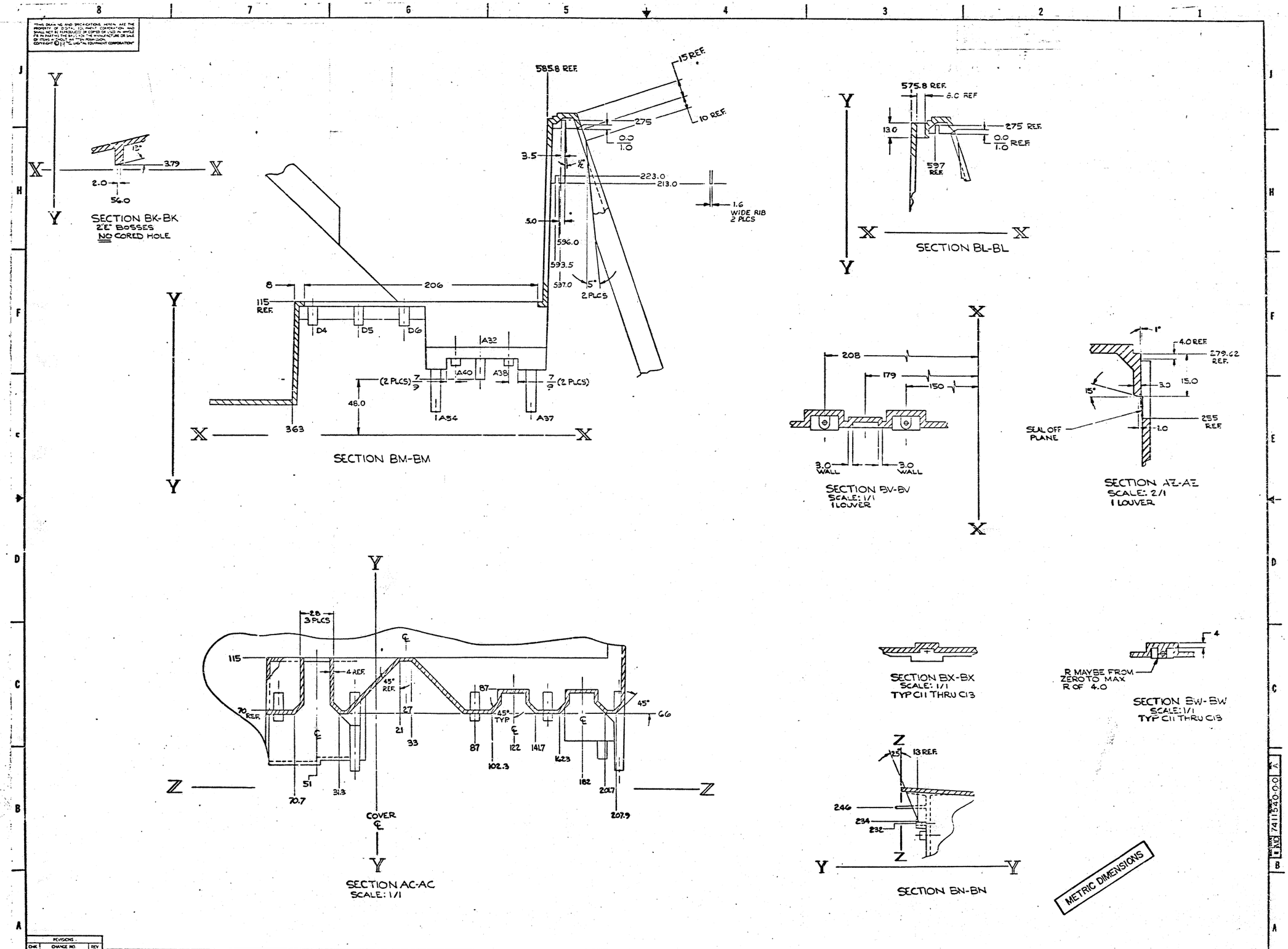
SECTION BK-BK
2'E" BOSSES
NO CORED HOLE
SECTION BM-BM
SECTION BL-BL
SECTION BV-BV
SCALE: 1/1
1 LOUVER
SECTION AZ-AZ
SCALE: 2/1
1 LOUVER
SEAL OFF PLANE
SECTION AC-AC
SCALE: 1/1
COVER
SECTION BX-BX
SCALE: 1/1
TYP C11 THRU C13
SECTION BW-BW
SCALE: 1/1
TYP C11 THRU C13
R MAYBE FROM ZERO TO MAX R OF 4.0
SECTION BN-BN
METRIC DIMENSIONS
TITLE
SHELL VT5Ø
SIZE E
CODE MD
NUMBER 7411540-0-0
REV. A
SCALE 1/1
SHEET 1 OF 45

THIS DRAWING AND SPECIFICATIONS HEREIN ARE THE PROPERTY OF DIGITAL EQUIPMENT CORPORATION AND SHALL NOT BE REPRODUCED OR COPIED OR USED IN WHOLE OR IN PART AS THE BASIS FOR THE MANUFACTURE OR SALE OF ITEMS WITHOUT WRITTEN PERMISSION. COPYRIGHT © 1975 DIGITAL EQUIPMENT CORPORATION

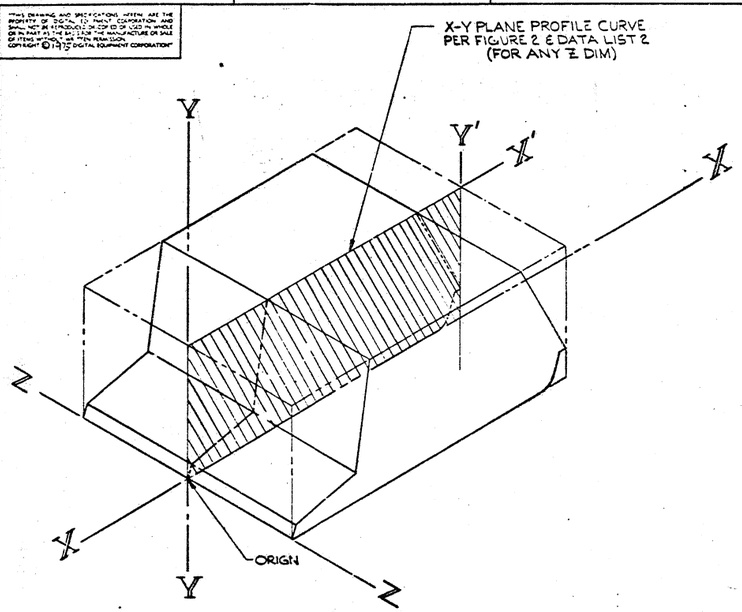

DETAIL-O
SCALE: 1/4

LEGEND D

SHELL PROFILE DIMENSIONAL INFORMATION

SECTION PLANE	FIGURE NO	FIGURE SHEET	DATA LIST NO	DATA LIST SHEET	REMARKS
X-Z PLANE AT Y=0	1	13	1	29	SEE DETAIL-N
X-Y PLANE ANY Z DIM	2	14	2	30	SEE DETAIL-O
Y-Z PLANE AT X=:					SEE DETAIL PEM
0	3	15	3	31	
50	4	16	4	32	
100	5	17	5	33	
150	6	18	6	34	
200	7	19	7	35	
250	8	20	8	36	
300	9	21	9	37	
350	10	22	10	38	
400	11	23	11	39	
450	12	24	12	40	
500	13	25	13	41	
550	14	26	14	42	
600	15	27	15	43	
650	16	28	16	44	

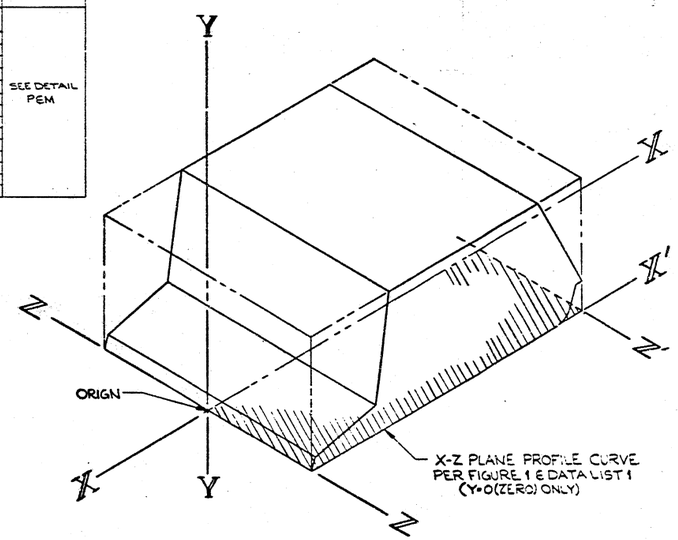

DETAIL-N
SCALE: 1/4

NOTES:

1. SHELL PROFILE IS SYMETRICAL ABOUT THE X-Y PLANE.
2. PROFILE PER FIGURE 2 & DATA LIST 2 IS CONSTANT ENTIRE WIDTH OF SHELL (-Z TO +Z)
3. INFORMATION CONTAINED IN FIGURE 1-16 & DATA LIST 1-16 DEFINE A SHAPE NOT ENTIRELY USED BY THE SHELL. DISREGARD ALL INFORMATION NOT WITHIN THE LIMITS OF THE SHELL AS GIVEN IN SHEET 1-11
4. COORDINATES IN DATA LIST 1 THRU 16 ARE FINISH PART SIZE MAT'L SHRINKAGE IS NOT INCLUDED
5. CURVES IN FIGURES 1 THRU 16 ARE FOR TEMPLATE PURPOSES & REF ONLY, SCALE OF 1.006 TO 1 INCLUDES .6% MAT'L SHRINKAGE A 100% PHOTO REPRODUCTION OF CURVE ORIGINAL IS REQD
6. AXES PER CASTESIAN COORDINATES, ALL DIMENISION RELATE TO AXES, NOT TO DATUM PLANES. A DATUM PLANE IN THIS DWG IS DEFINED BY ANY TWO OF THREE AXES.

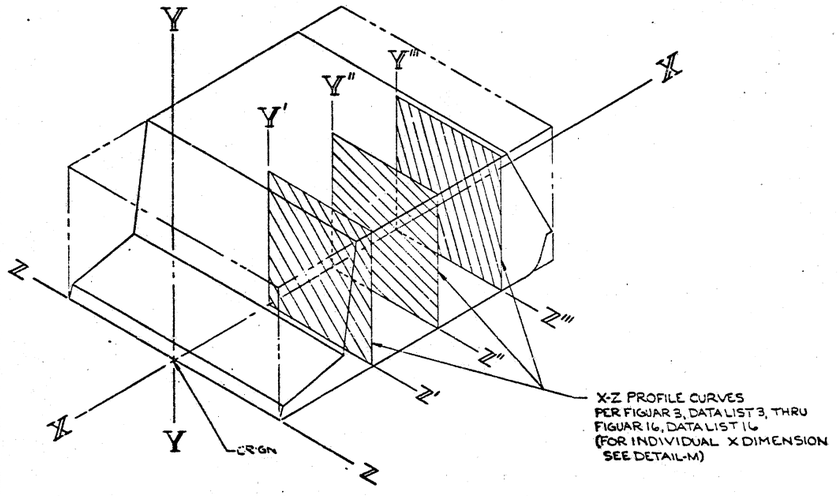

DETAIL-P
SCALE: 1/4

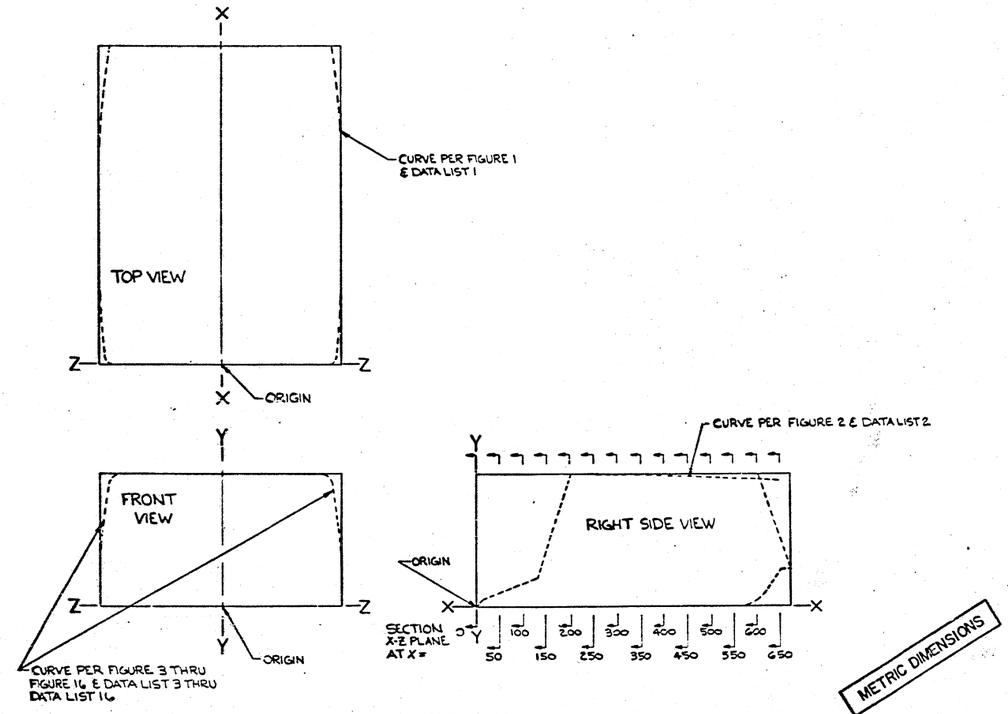

DETAIL-M
ORIENTATION OF AXIS-VT50 SHELL
SCALE: 1/4

METRIC DIMENSIONS

REVISIONS		
CHK	CHANGE NO	REV.

TITLE	SIZE	CODE	NUMBER	REV
SHELL VT50	E	MD	7411540-0-0	A
SCALE 1/1	SHEET 12 OF 45	DIST.		

7411540-0-0 A

THIS DRAWING AND SPECIFICATIONS, HEREIN ARE THE PROPERTY OF DIGITAL EQUIPMENT CORPORATION AND SHALL NOT BE REPRODUCED OR COPIED OR USED IN WHOLE OR IN PART AS THE BASIS FOR THE MANUFACTURE OR SALE OF ITEMS WITHOUT WRITTEN PERMISSION.
COPYRIGHT © 1975 DIGITAL EQUIPMENT CORPORATION

NOTES:
1. THE SHELL PROFILE IS SYMETRICAL ABOUT THE X-Y PLANE
2. FOR COORDINATES OF THE PROFILE CURVE REFER TO DATA LIST 1 (SHEET 29)
3. TO BE USED FOR CURVE TEMPLATE PUPOSES ONLY. SCALE OF 1.006:1 INCLUDES .6% SHRINKAGE FACTOR.

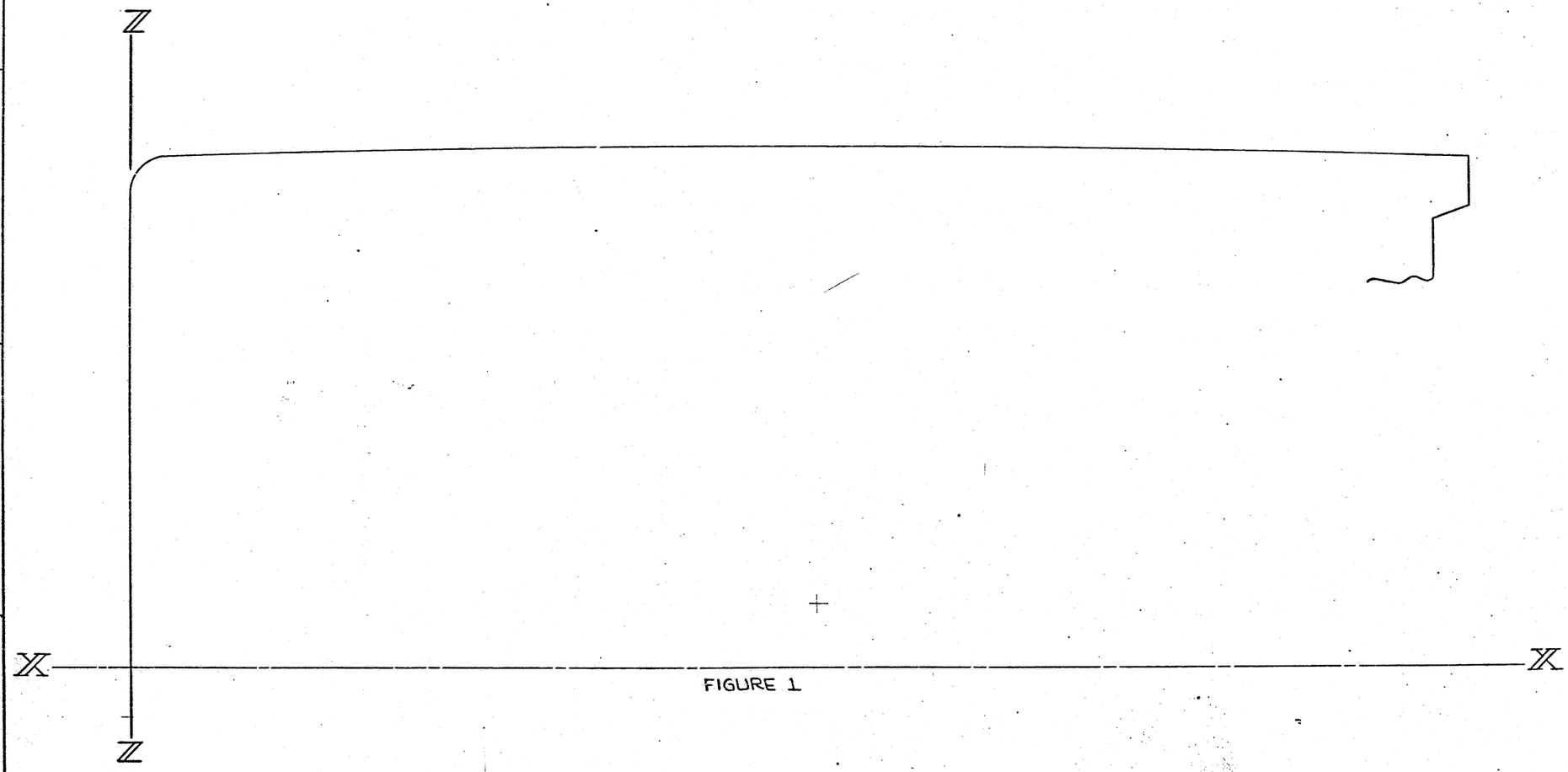

FIGURE 1

REVISIONS		
CHK	CHANGE NO.	REV

TITLE	SIZE	CODE	NUMBER	REV
SHELL VT50	D	MD	7411540-0-0	A
SCALE: 1.006:1 SHEET 1 OF 45	DIST			

DRAWING NUMBER	REV
D MD 7411540-0-0	A

THIS DRAWING AND SPECIFICATIONS, HEREIN, ARE THE PROPERTY OF DIGITAL EQUIPMENT CORPORATION AND SHALL NOT BE REPRODUCED OR COPIED OR USED IN WHOLE OR IN PART AS THE BASIS FOR THE MANUFACTURE OR SALE OF ITEMS, WITHOUT WRITTEN PERMISSION.
COPYRIGHT ©1971 DIGITAL EQUIPMENT CORPORATION.

NOTES:
1. THE UPPER PROFILE CURVE IS USED BETWEEN THE POINTS X = 182. & X = 612. THE REMAINING PORTION OF THE CURVE IS FOR PLOTTING PURPOSES ONLY THE X&Y COORDINATES ARE THE SAME FOR THE ENTIRE WIDTH OF THE SHELL
2. FOR COORDINATES OF PROFILE CURVE REFER TO DATA LIST 2 (SHEET 30)
3. TO BE USED FOR CURVE TEMPLATE PURPOSES ONLY SCALE OF 1.006:1 INCLUDES .6% SHRINKAGE FACTOR

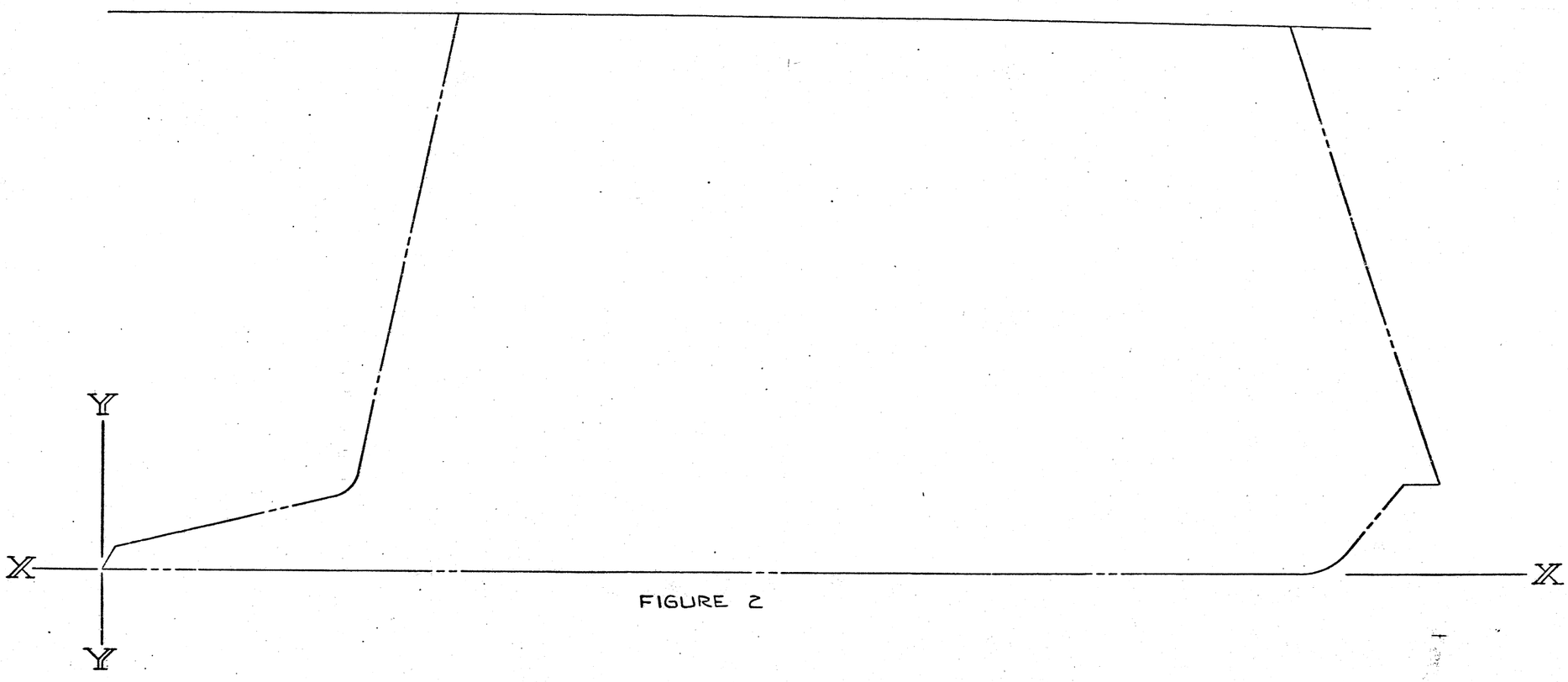

FIGURE 2

REVISIONS		
CHK	CHANGE NO	REV

TITLE	SIZE	CODE	NUMBER	REV
SHELL VT50	D	MD	7411540-0-0	A
SCALE: 1.006:1 SHEET 2 OF 45				

THIS DRAWING AND SPECIFICATIONS HEREIN ARE THE PROPERTY OF DIGITAL EQUIPMENT CORPORATION AND SHALL NOT BE REPRODUCED OR COPIED OR USED IN WHOLE OR IN PART AS THE BASIS FOR THE MANUFACTURE OR SALE OF ITEMS WITHOUT WRITTEN PERMISSION
COPYRIGHT © 1974 DIGITAL EQUIPMENT CORPORATION

NOTES:

1. FOR COORDINATES OF PROFILE CURVE REFER TO DATA LIST #3 (SHEET 31)
2. TO BE USED FOR CURVE TEMPLATE PURPOSES ONLY. SCALE OF 1.006 : 1 INCLUDES .6% SHRINKAGE FACTOR.

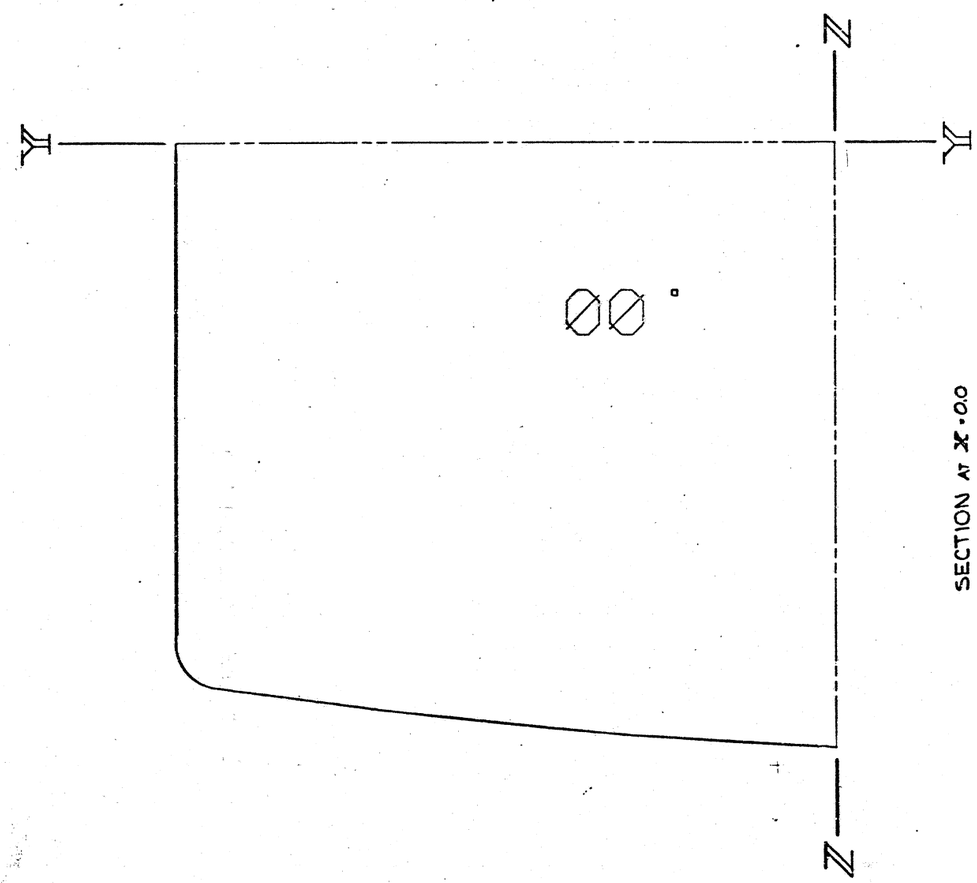

SECTION AT X = 0.0

FIGURE 3

REVISIONS		
CHK	CHANGE NO	REV

TITLE	SIZE	CODE	NUMBER	REV
SHELL VT50	D	MD	7411540-0-0	A
SCALE: 1.006 : 1	SHEET 15 OF 45	DIST		

D MD 7411540-0-0 A

THIS DRAWING AND SPECIFICATIONS, HEREIN ARE THE PROPERTY OF DIGITAL EQUIPMENT CORPORATION, AND SHALL NOT BE REPRODUCED OR COPIED OR USED IN WHOLE OR IN PART AS THE BASIS FOR THE MANUFACTURE OR SALE OF ITEMS WITHOUT WRITTEN PERMISSION.
COPYRIGHT © 1974 DIGITAL EQUIPMENT CORPORATION

NOTES:
1. FOR COORDINATES OF PROFILE CURVE REFER TO DATA LIST #4 (SHEET 32)
2. TO BE USED FOR CURVE TEMPLATE PURPOSES ONLY, SCALE OF-1.006:1 INCLUDES .6% SHRINKAGE FACTOR

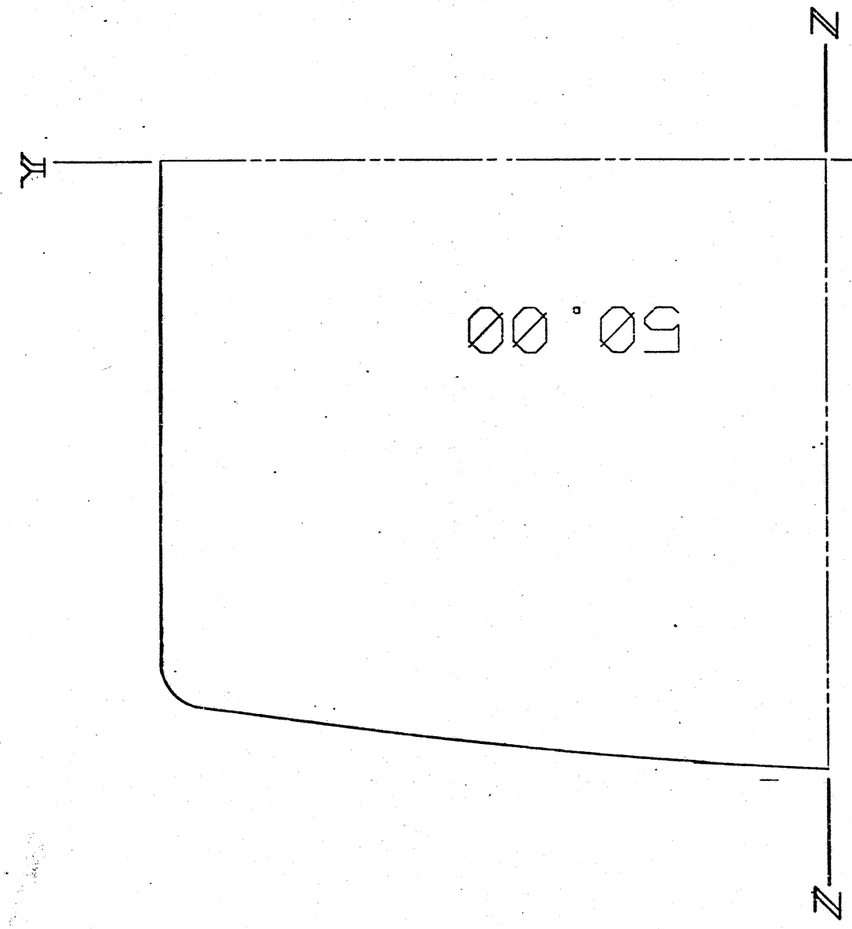

SECTION AT X = 50.0

FIGURE 4

REVISIONS		
CHK	CHANGE NO	REV

TITLE	SIZE	CODE	NUMBER	REV
SHELL VT50	D	MD	7411540-0-0	A
SCALE 1.006:1 SHEET 16 OF 45	DIST			

D:\07411540-0-0 A

THIS DRAWING AND SPECIFICATIONS HEREIN ARE THE PROPERTY OF DIGITAL EQUIPMENT CORPORATION AND SHALL NOT BE REPRODUCED OR COPIED OR USED IN WHOLE OR IN PART AS THE BASIS FOR THE MANUFACTURE OR SALE OF ITEMS WITHOUT WRITTEN PERMISSION.
COPYRIGHT © 1974 DIGITAL EQUIPMENT CORPORATION

NOTES:
1. FOR COORDINATES OF PROFILE CURVE REFER TO DATA LIST #5 (SHEET 33)
2. TO BE USED FOR CURVE TEMPLATE PURPOSES ONLY, SCALE OF 1.006:1 INCLUDES .6% SHRINKAGE FACTOR

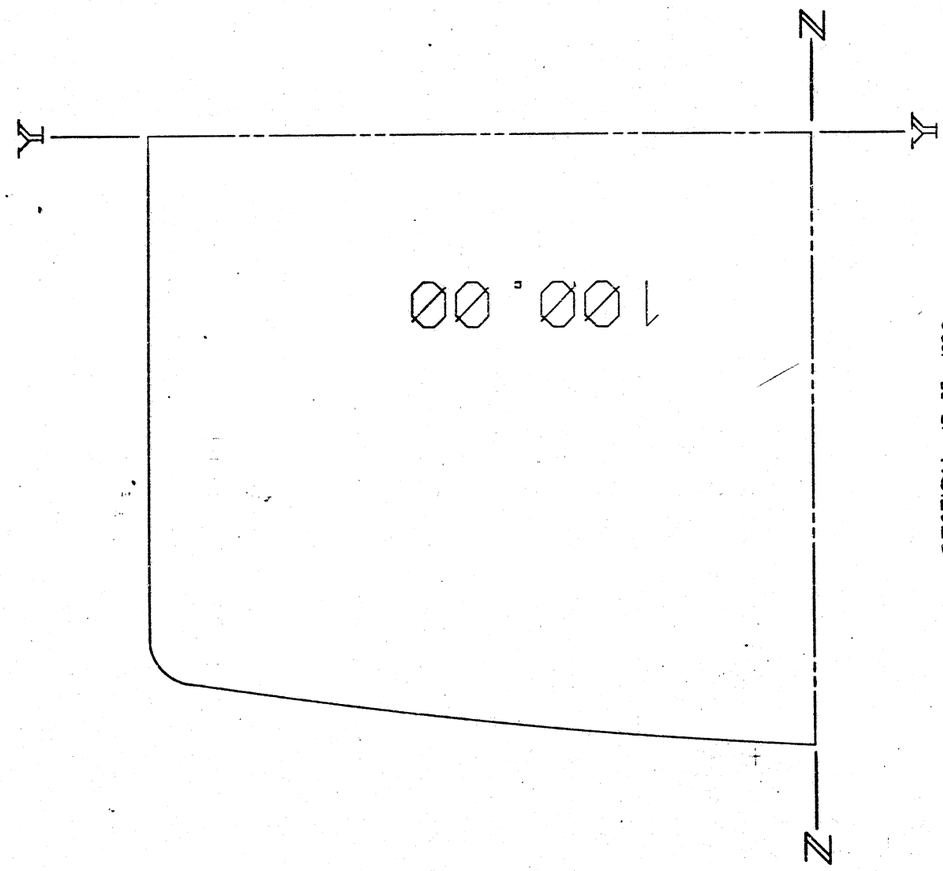

SECTION AT X = 100.0

FIGURE 5

REVISIONS		
CHK	CHANGE NO.	REV

TITLE	SIZE	CODE	NUMBER	REV
SHELL VT50	D	MD	7411540-0-0	A
SCALE 1.006:1	SHEET 17 OF 45	DIST		

THIS DRAWING AND SPECIFICATIONS, HEREIN, ARE THE PROPERTY OF DIGITAL EQUIPMENT CORPORATION, AND SHALL NOT BE REPRODUCED OR COPIED OR USED IN WHOLE OR IN PART AS THE BASIS FOR THE MANUFACTURE OR SALE OF ITEMS, WITHOUT WRITTEN PERMISSION.
COPYRIGHT © 1974 DIGITAL EQUIPMENT CORPORATION.

NOTES:
1. FOR COORDINATES OF PROFILE CURVE REFER TO DATA LIST #6 (SHEET 34)
2. TO BE USED FOR CURVE TEMPLATE PURPOSES ONLY. SCALE OF 1.006 : 1 INCLUDES .6% SHRINKAGE FACTOR

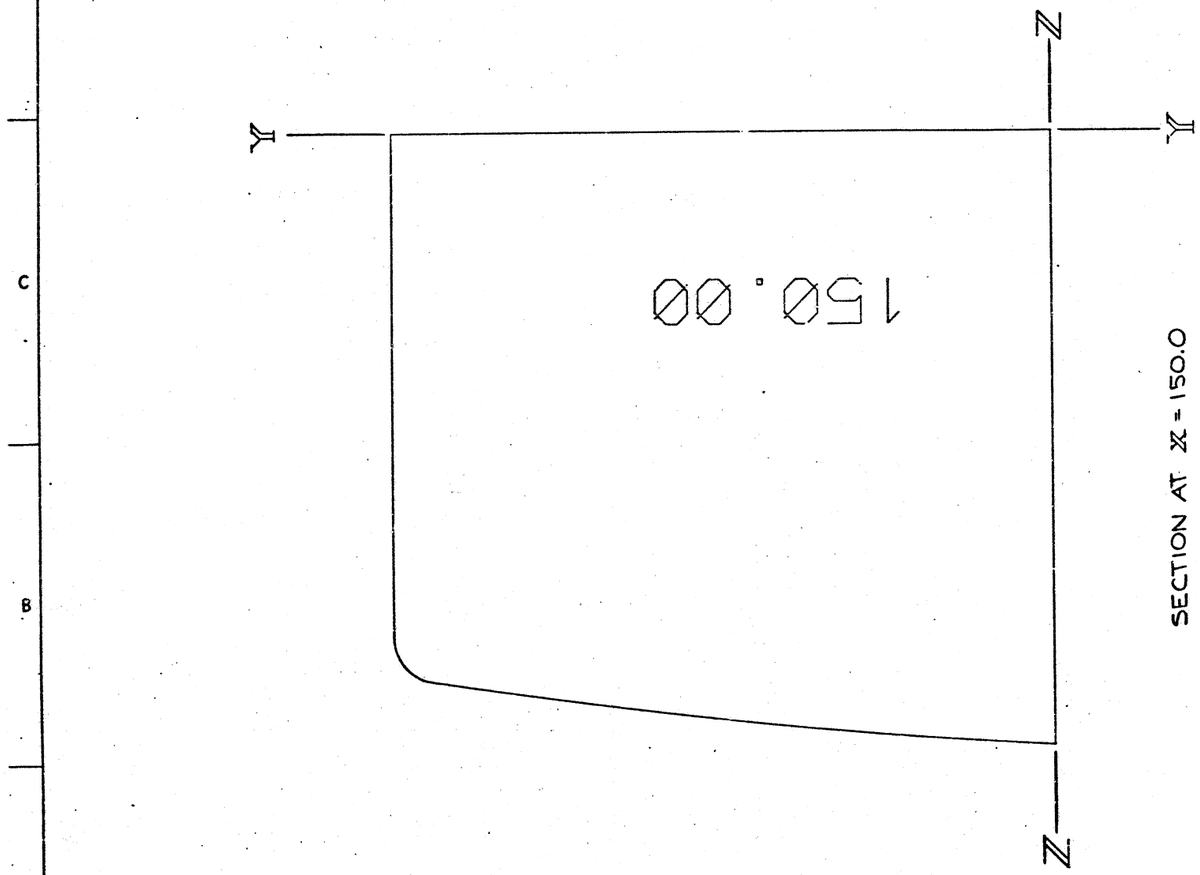

SECTION AT X = 150.0

FIGURE 6

REVISIONS		
CHK	CHANGE NO	REV.

TITLE	SIZE	CODE	NUMBER	REV
SHELL VT5Ø	D	MD	7411540-0-0	A
SCALE: 1.006 : 1	SHEET 18 OF 45			

THIS DRAWING AND SPECIFICATIONS HEREIN ARE THE PROPERTY OF DIGITAL EQUIPMENT CORPORATION AND SHALL NOT BE REPRODUCED OR COPIED OR USED IN WHOLE OR IN PART AS THE BASIS FOR THE MANUFACTURE OR SALE OF ITEMS WITHOUT WRITTEN PERMISSION
COPYRIGHT © 1974 DIGITAL EQUIPMENT CORPORATION

NOTES:

1. FOR COORDINATES OF PROFILE CURVE REFER TO DATA LIST #7 (SHEET 35)
2. TO BE USED FOR CURVE TEMPLATE PURPOSES ONLY, SCALE OF 1.006 : 1 INCLUDES .6% SHRINKAGE FACTOR

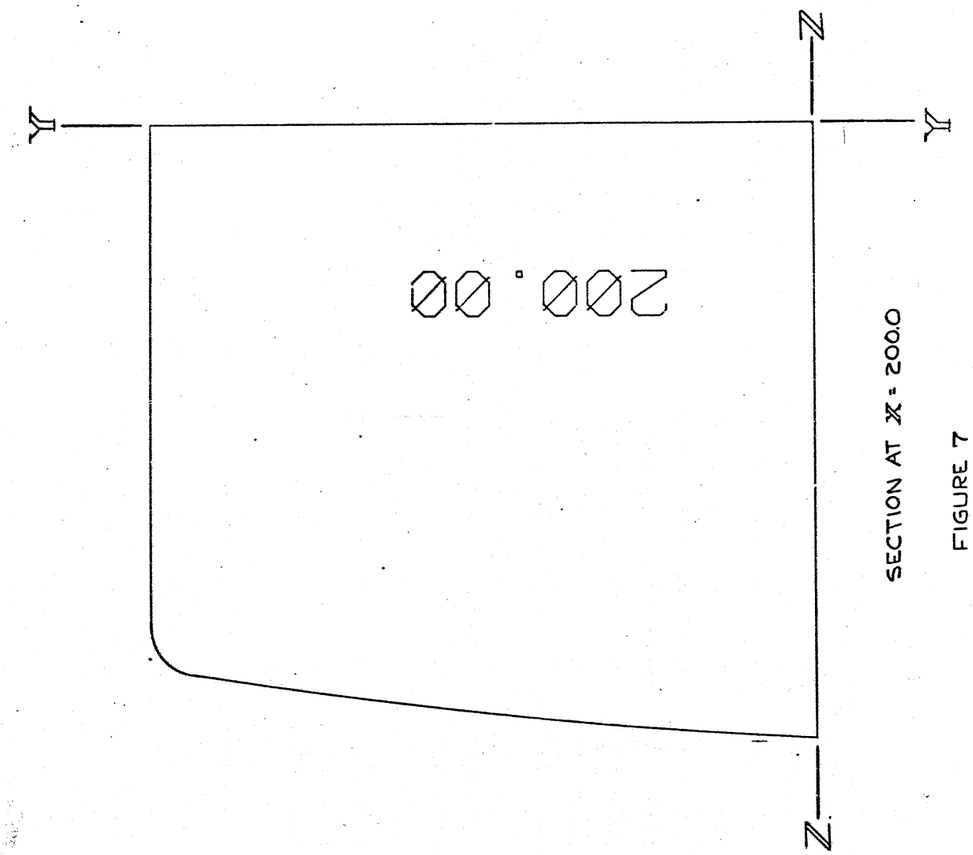

SECTION AT X = 200.0

FIGURE 7

REVISIONS		
CHK	CHANGE NO	REV

TITLE	SIZE	CODE	NUMBER	REV
SHELL VT5Ø	D	MD	7411540-0-0	A
SCALE 1.006 : 1	SHEET 19 OF 45	DIST.		

THIS DRAWING AND SPECIFICATIONS, HEREIN, ARE THE PROPERTY OF DIGITAL EQUIPMENT CORPORATION AND SHALL NOT BE REPRODUCED OR COPIED OR USED IN WHOLE OR IN PART AS THE BASIS FOR THE MANUFACTURE OR SALE OF ITEMS, WITHOUT WRITTEN PERMISSION.
COPYRIGHT ©1974 DIGITAL EQUIPMENT CORPORATION

NOTES:
1. FOR COORDINATES OF PROFILE CURVE REFER TO DATA LIST #8 (SHEET 36)
2. TO BE USED FOR CURVE TEMPLATE PURPOSES ONLY, SCALE OF 1.006:1 INCLUDES .6% SHRINKAGE FACTOR.

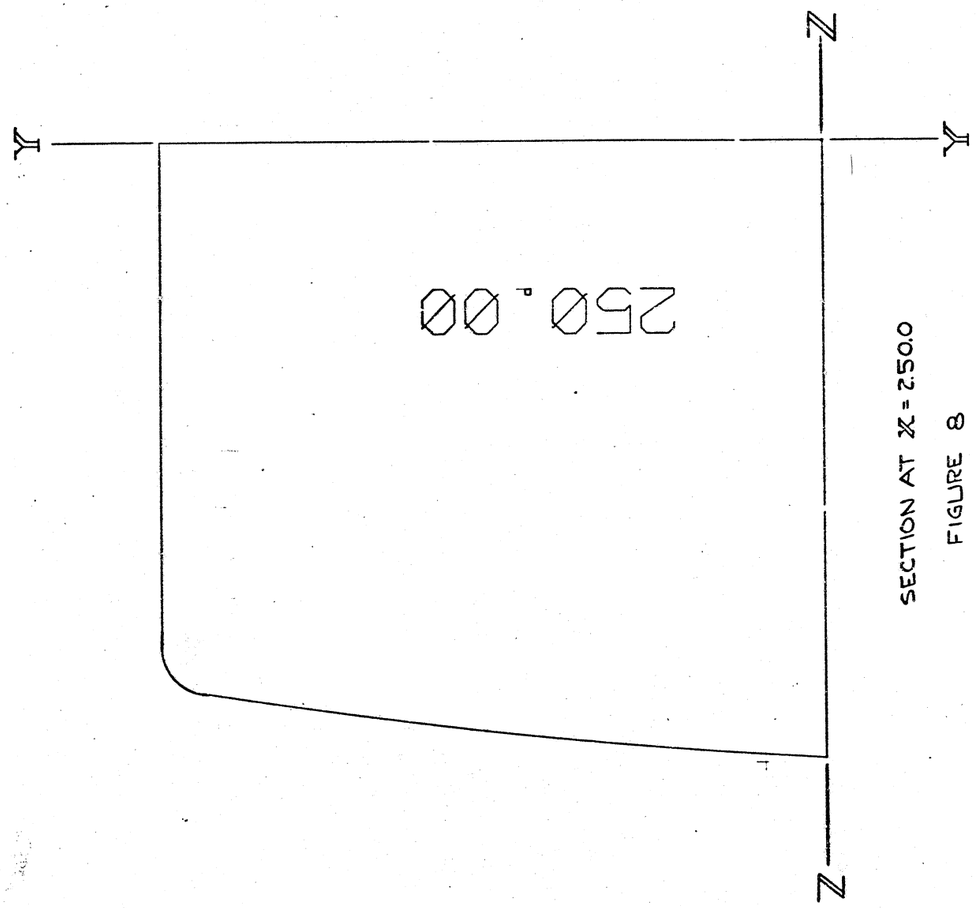

SECTION AT X = 2500
FIGURE 8

REVISIONS		
CHK	CHANGE NO	REV

TITLE	SIZE	CODE	NUMBER	REV
SHELL VT50	D		MD 7411540-0-0	A
SCALE 1.006:1 SHEET 20 OF 45	D.ST			

DRAWING NUMBER D MD 7411540-0-0 REV A

THIS DRAWING AND SPECIFICATIONS, HEREIN, ARE THE PROPERTY OF DIGITAL EQUIPMENT CORPORATION AND SHALL NOT BE REPRODUCED OR COPIED OR USED IN WHOLE OR IN PART AS THE BASIS FOR THE MANUFACTURE OR SALE OF ITEMS WITHOUT WRITTEN PERMISSION.
COPYRIGHT © 1979 DIGITAL EQUIPMENT CORPORATION

NOTES:
1. FOR COORDINATES OF PROFILE CURVE REFER TO DATA LIST # 9 (SHEET 37)
2. TO BE USED FOR CURVE TEMPLATE PURPOSES ONLY, SCALE OF 1.006 : 1 INCLUDES 6% SHRINKAGE FACTOR

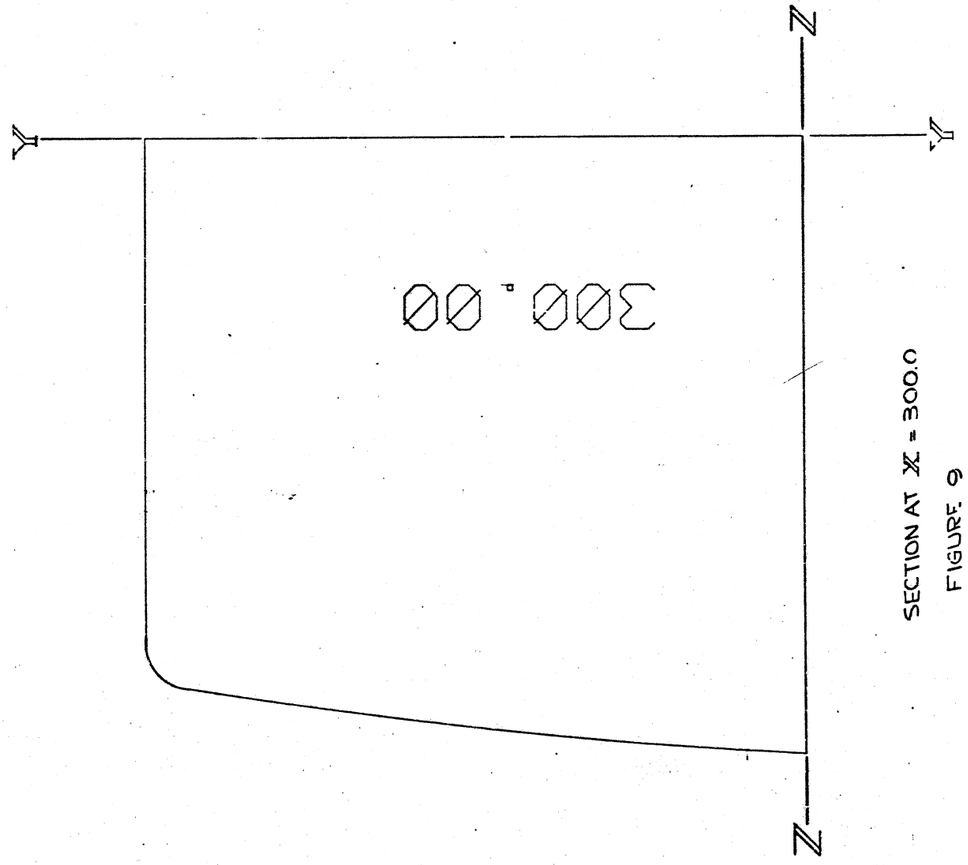

SECTION AT X = 300.0

FIGURE 9

REVISIONS		
CHK	CHANGE NO	REV

TITLE	SIZE	CODE	NUMBER	REV
SHELL VT50	D	MD	7411540-0-0	A
SCALE 1.006 : 1	SHEET 21 OF 45	DIST		

THIS DRAWING AND SPECIFICATIONS, HEREIN ARE THE PROPERTY OF DIGITAL EQUIPMENT CORPORATION AND SHALL NOT BE REPRODUCED OR USED IN WHOLE OR IN PART AS THE BASIS FOR THE MANUFACTURE OR SALE OF ITEMS WITHOUT WRITTEN PERMISSION.
COPYRIGHT © 1979 DIGITAL EQUIPMENT CORPORATION

NOTES.
1. FOR COORDINATES OF PROFILE CURVE REFER TO DATA LIST T-10 (SHEET 38)
2. TO BE USED FOR CURVE TEMPLATE PURPOSES ONLY, SCALE OF 1.006 : 1 INCLUDES 6% SHRINKAGE FACTOR

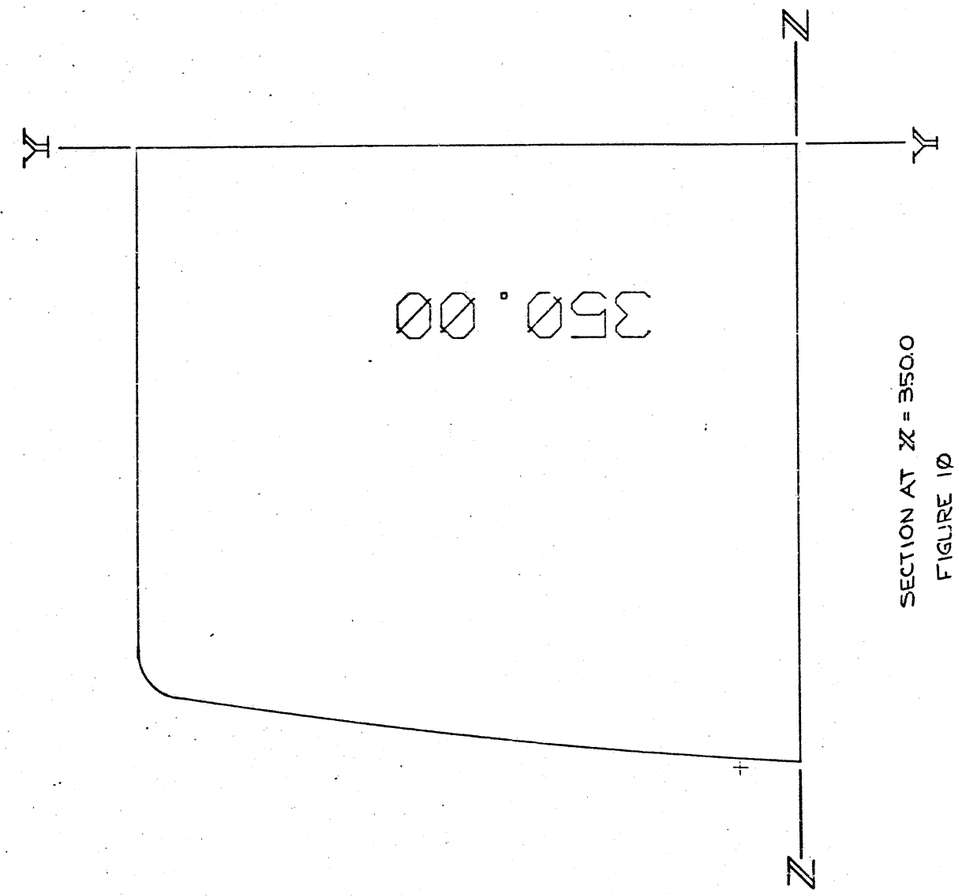

SECTION AT X = 350.00
FIGURE 10

REVISIONS		
CHK	CHANGE NO	REV

TITLE	SIZE	CODE	NUMBER	REV
SHELL VT50	D	DMD	74111540-0-0	A
SCALE: 1.006:1 SHEET 22 OF 45	DIST.			

ORIGINATOR DMD 74111540-0-0 REV A

"THIS DRAWING AND SPECIFICATIONS, HEREIN, ARE THE PROPERTY OF DIGITAL EQUIPMENT CORPORATION AND SHALL NOT BE REPRODUCED OR COPIED OR USED IN WHOLE OR IN PART AS THE BASIS FOR THE MANUFACTURE OR SALE OF ITEMS WITHOUT WRITTEN PERMISSION
COPYRIGHT ©1974 DIGITAL EQUIPMENT CORPORATION"

NOTES:
1. FOR COORDINATES OF PROFILE CURVE REFER TO DATA LIST #11 (SHEET 39)
2. TO BE USED FOR CURVE TEMPLATE PURPOSES ONLY, SCALE OF 1006:1 INCLUDES .6% SHRINKAGE FACTOR.

SECTION AT X = 400.0
FIGURE 11

REVISIONS		
CHK	CHANGE NO.	REV

TITLE	SIZE	CODE	NUMBER	REV
SHELL VT50	D	MD	7411540-0-0	A
SCALE: 1.006:1 SHEET 23 OF 45	DIST			

DMD 7411540-0-0 A

THIS DRAWING AND SPECIFICATIONS, HEREIN ARE THE PROPERTY OF DIGITAL EQUIPMENT CORPORATION AND SHALL NOT BE REPRODUCED OR C ED OR USED IN WHOLE OR IN PART AT THE EX ION FOR THE MANUFACTURE OR SALE OF ITEM, WITHOUT WRITTEN PERMISSION.
COPYRIGHT © 1974 DIGITAL EQUIPMENT CORPORATION

NOTES
1. FOR COORDINATES OF PROFILE CURVE REFER TO DATA LIST 12 (SHEET 40)
2. TO BE USED FOR CURVE TEMPLATE PURPOSES ONLY, SCALE OF 1.006:1 INCLUDES 6% SHRINKAGE FACTOR.

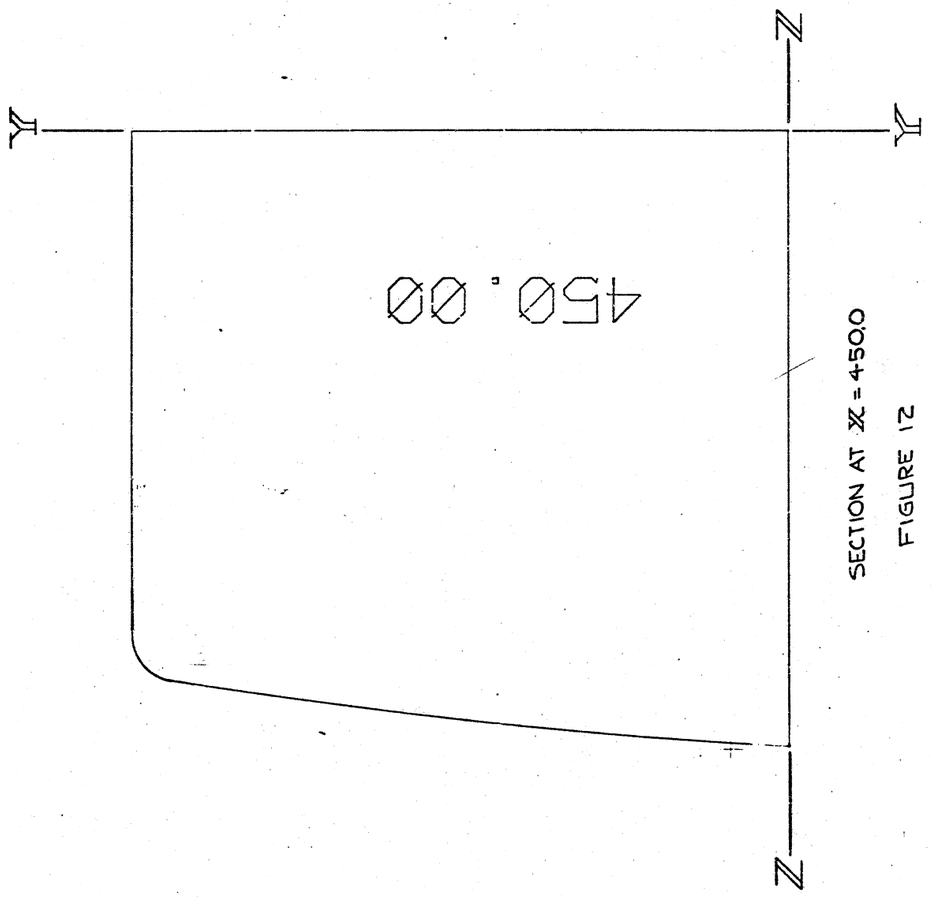

SECTION AT X = 4500

FIGURE 12

REVISIONS		
CHK	CHANGE NO	REV

TITLE	SIZE	CODE	NUMBER	REV
SHELL VT50	D	MD	7411540-0-0	A
SCALE 1.006:1	SHEET 4 OF 45		DIST	

REV	NUMBER	CODE	SIZE
A	7411540-0-0	MD	D

THIS DRAWING AND SPECIFICATIONS, HEREIN ARE THE PROPERTY OF DIGITAL EQUIPMENT CORPORATION AND SHALL NOT BE REPRODUCED OR COPIED OR USED IN WHOLE OR IN PART AS THE BASIS FOR THE MANUFACTURE OR SALE OF ITEMS WITHOUT WRITTEN PERMISSION.
COPYRIGHT © 1974 DIGITAL EQUIPMENT CORPORATION

NOTES:
1. FOR COORDINATES OF PROFILE CURVE REFER TO DATA LIST # 13 (SHEET 41)
2. TO BE USED FOR CURVE TEMPLATE PURPOSES ONLY, SCALE OF 1.006:1 INCLUDE .6% SHRINKAGE FACTOR.

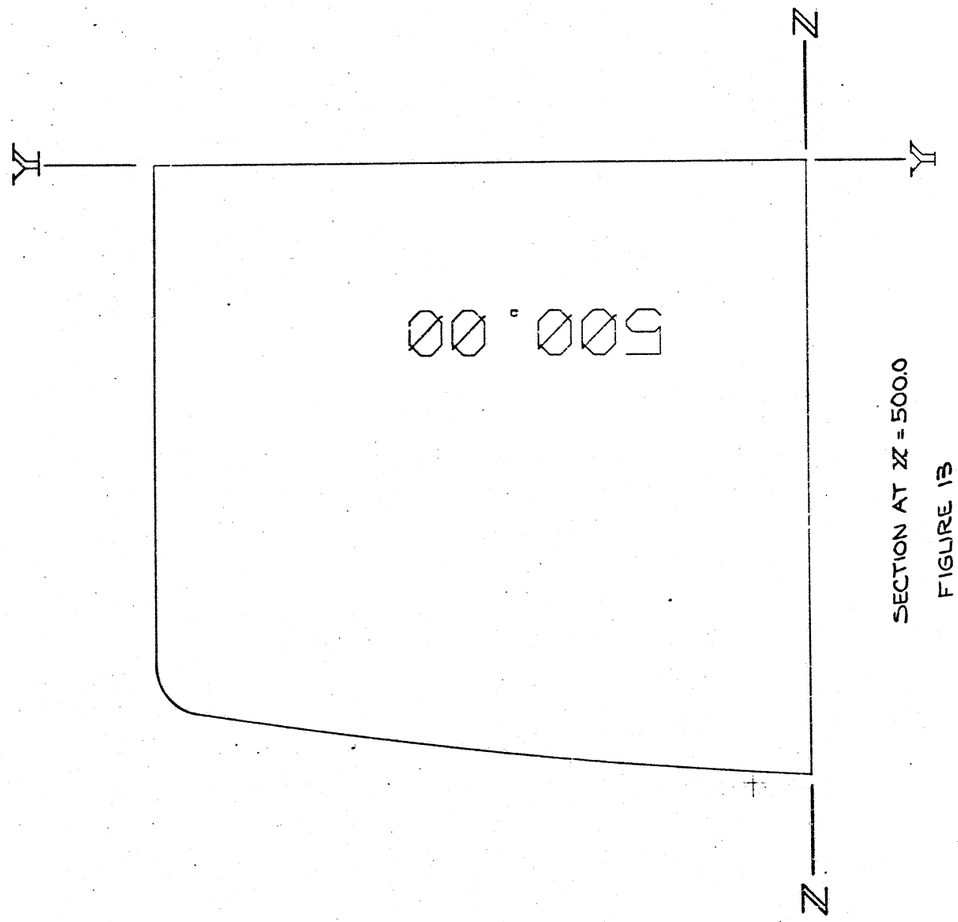

SECTION AT Z = 500.0

FIGURE 13

REVISIONS		
CHK	CHANGE NO	REV

TITLE	SIZE	CODE	NUMBER	REV
SHELL VT50	D	MD	7411540-0-0	A
SCALE 1.006:1 SHEET 25 OF 45	DIST			

D MD 7411540-0-0 A

THIS DRAWING AND SPECIFICATIONS, HEREIN, ARE THE PROPERTY OF DIGITAL EQUIPMENT CORPORATION, AND SHALL NOT BE REPRODUCED, COPIED OR USED IN WHOLE OR IN PART AS THE BASIS FOR THE MANUFACTURE OR SALE OF ITEM, A SIMILAR WITHOUT PERMISSION COPYRIGHT © 1974 DIGITAL EQUIPMENT CORPORATION

NOTES:
1. FOR COORDINATES OF PROFILE CURVE REFER TO DATA LIST #14 (SHEET 42)
2. TO BE USED FOR CURVE TEMPLATE PURPOSES ONLY, SCALE OF 1.006:1 INCLUDES .6% SHRINKAGE

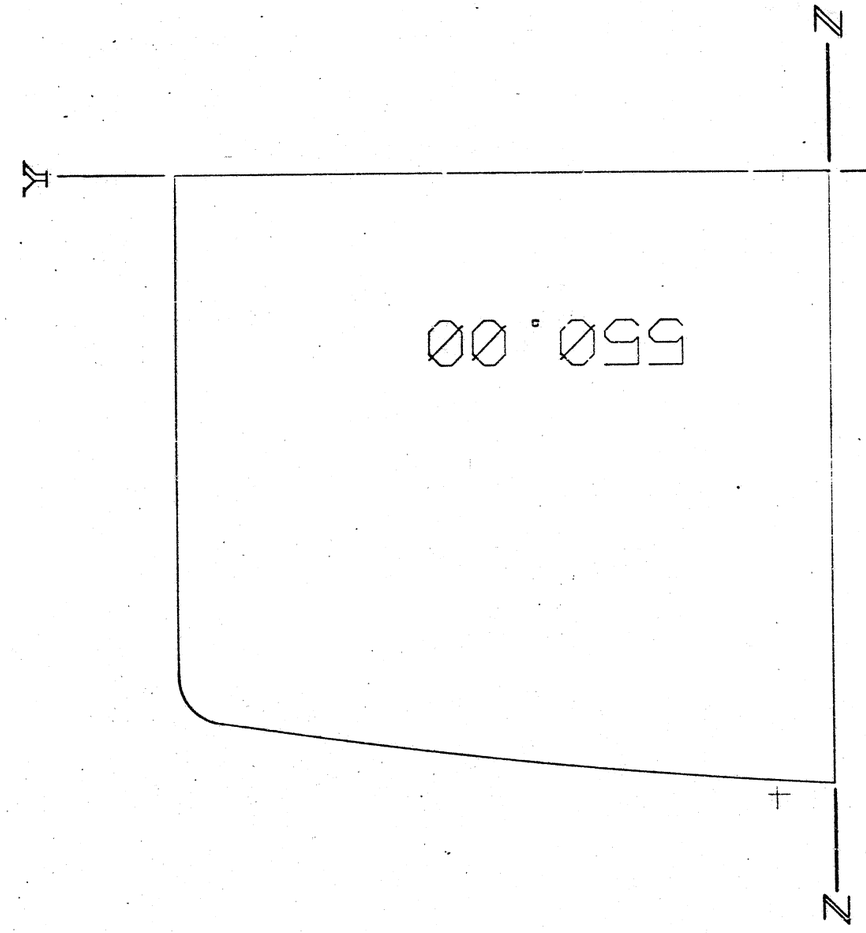

SECTION AT X = 5500
FIGURE 14

REVISIONS		
CHA	CHANGE NO	REV

TITLE	SIZE	CODE	NUMBER	REV
SHELL VT50	D	MD	7411540-0-0	A
SCALE: 1.006:1	SHEET 2 OF 45	DIST 1		

DWG 7411540-0-0 REV A

THIS DRAWING AND SPECIFICATIONS, HEREIN, ARE THE PROPERTY OF DIGITAL EQUIPMENT CORPORATION AND SHALL NOT BE REPRODUCED OR COPIED OR USED IN WHOLE OR IN PART AS THE BASIS FOR THE MANUFACTURE OR SALE OF ITEMS WITHOUT WRITTEN PERMISSION.
COPYRIGHT © 1974 DIGITAL EQUIPMENT CORPORATION

NOTES:
1. FOR COORDINATES OF PROFILE CURVE REFER TO DATA LIST = 15 (SHEET 43)
2. TO BE USED FOR CURVE TEMPLATE PURPOSES ONLY. SCALE OF 1.006:1 INCLUDES .6% SHRINKAGE FACTOR.

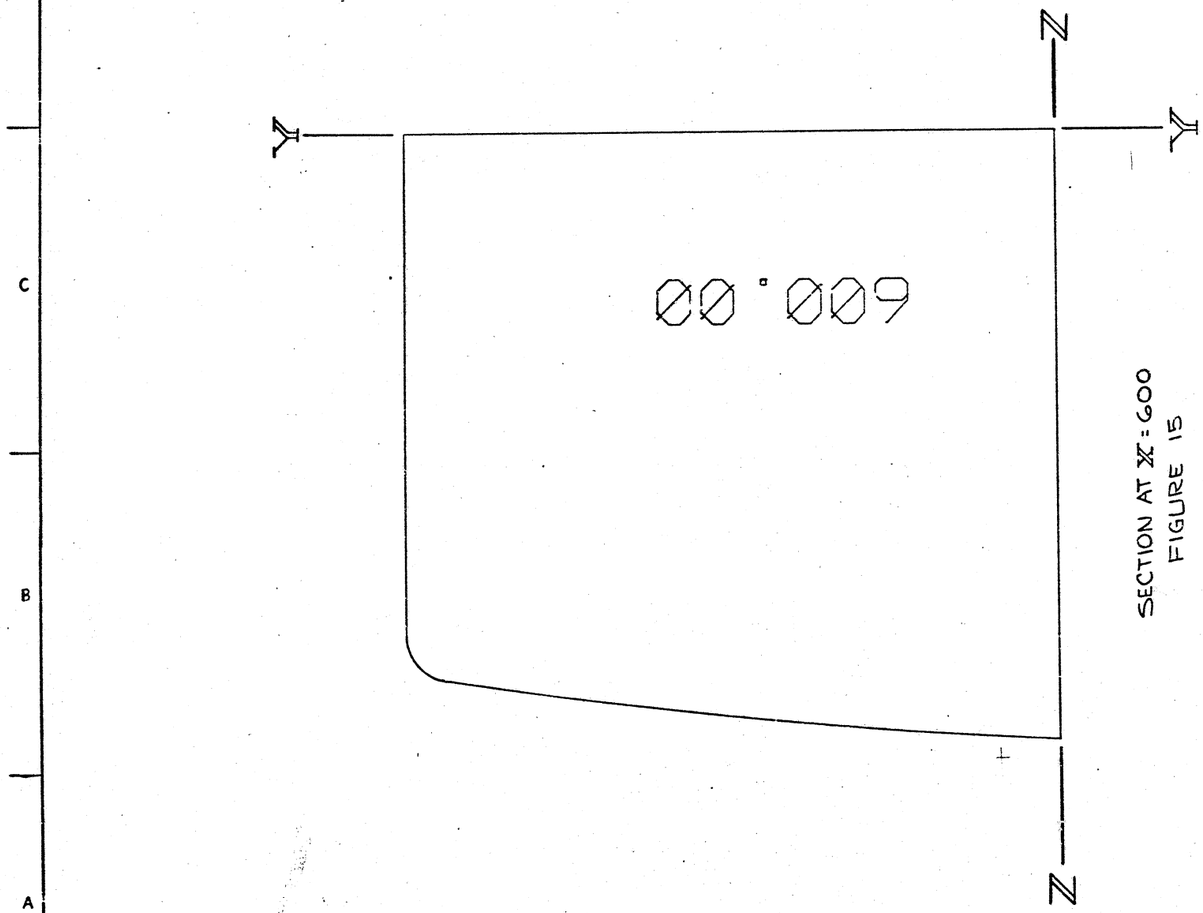

SECTION AT X = 600
FIGURE 15

REVISIONS		
CHK	CHANGE NO.	REV

TITLE	SIZE	CODE	NUMBER	REV
SHELL VT50	D	MD	7411540-0-0	A
SCALE 1.006:1 SHEET 2 OF 45	DIST			

DRAWING NUMBER D MD 7411540-2-0 REV A

THIS DRAWING AND SPECIFICATIONS, HEREIN ARE THE PROPERTY OF DIGITAL EQUIPMENT CORPORATION AND SHALL NOT BE REPRODUCED OR COPIED OR USED IN WHOLE OR IN PART AS THE BASIS FOR THE MANUFACTURE OR SALE OF ITEMS WITHOUT WRITTEN PERMISSION.
COPYRIGHT © 1974 DIGITAL EQUIPMENT CORPORATION

NOTES:
1. FOR COORDINATES OF PROFILE CURVE REFER TO DATA LIST #16 (SHEET 44)
2. TO BE USED FOR CURVE TEMPLATE PURPOSES ONLY. SCALE OF 1.006 : 1 INCLUDES .6% SHRINKAGE FACTOR.

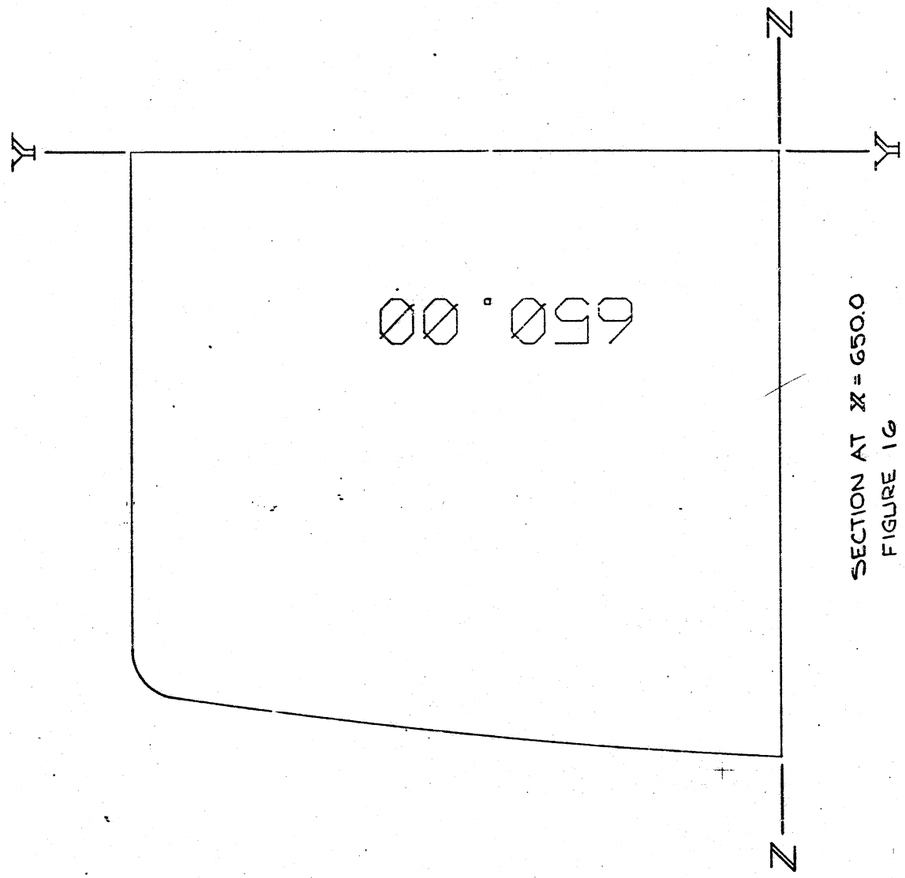

SECTION AT X = 650.0
FIGURE 16

REVISIONS		
CHK	CHANGE NO	REV

TITLE	SIZE	NUMBER	REV
SHELL VT50	D	7411340-0-0	A
SCALE: 1.006/1 SHEET 3 OF 45	DIST		

"THIS DRAWING AND SPECIFICATIONS, HEREIN, ARE THE PROPERTY OF DIGITAL EQUIPMENT CORPORATION AND SHALL NOT BE REPRODUCED OR COPIED OR USED IN WHOLE OR IN PART AS THE BASIS FOR THE MANUFACTURE OR SALE OF ITEMS WITHOUT WRITTEN PERMISSION.
COPYRIGHT © 1974 DIGITAL EQUIPMENT CORPORATION"

X	Z
0.0000000	258.5220030
5.0000000	259.6535700
10.0000000	258.8047600
15.0000000	259.9535700
20.0000000	259.1000000
25.0000000	259.2440520
30.0000000	259.3857100
35.0000000	259.5250000
40.0000000	259.6619000
45.0000000	259.7964300
50.0000000	259.9285700
55.0000000	260.0583300
60.0000000	260.1857100
65.0000000	260.3107100
70.0000000	260.4333300
75.0000000	260.5535700
80.0000000	260.6714200
85.0000000	260.7869000
90.0000000	260.9000000
95.0000000	261.0107100
100.0000000	261.1190500
105.0000000	261.2250000
110.0000000	261.3285700
115.0000000	261.4297600
120.0000000	261.5285700
125.0000000	261.6250000
130.0000000	261.7190500
135.0000000	261.8107100
140.0000000	261.9000000
145.0000000	261.9869000
150.0000000	262.0714300
155.0000000	262.1535700
160.0000000	262.2333300
165.0000000	262.3107100
170.0000000	262.3857200
175.0000000	262.4583400
180.0000000	262.5285700
185.0000000	262.5964300
190.0000000	262.6619000
195.0000000	262.7250000
200.0000000	262.7857100
205.0000000	262.8440500
210.0000000	262.9000000
215.0000000	262.9535700
220.0000000	263.0047600
225.0000000	263.0535700
230.0000000	263.1000000
235.0000000	263.1440500
240.0000000	263.1857100
245.0000000	263.2250000
250.0000000	263.2619100
255.0000000	263.2964300
260.0000000	263.3285700
265.0000000	263.3583300
270.0000000	263.3857200
275.0000000	263.4107200
280.0000000	263.4333300
285.0000000	263.4535700
290.0000000	263.4714300

X	Z
295.0000000	263.4869000
300.0000000	263.5000000
305.0000000	263.5107200
310.0000000	263.5190500
315.0000000	263.5250000
320.0000000	263.5285700
325.0000000	263.5297600
330.0000000	263.5285700
335.0000000	263.5250000
340.0000000	263.5190500
345.0000000	263.5107100
350.0000000	263.5000000
355.0000000	263.4869000
360.0000000	263.4714300
365.0000000	263.4535700
370.0000000	263.4333300
375.0000000	263.4107100
380.0000000	263.3857200
385.0000000	263.3583300
390.0000000	263.3285700
395.0000000	263.2964200
400.0000000	263.2619000
405.0000000	263.2250000
410.0000000	263.1857100
415.0000000	263.1440500
420.0000000	263.1000000
425.0000000	263.0535700
430.0000000	263.0047600
435.0000000	262.9535700
440.0000000	262.9000000
445.0000000	262.8440500
450.0000000	262.7857100
455.0000000	262.7250000
460.0000000	262.6619000
465.0000000	262.5964300
470.0000000	262.5285700
475.0000000	262.4583300
480.0000000	262.3857200
485.0000000	262.3107100
490.0000000	262.2333300
495.0000000	262.1535700
500.0000000	262.0714300
505.0000000	261.9869000
510.0000000	261.9000000
515.0000000	261.8107100
520.0000000	261.7190500
525.0000000	261.6250000
530.0000000	261.5285700
535.0000000	261.4297600
540.0000000	261.3285700
545.0000000	261.2250000
550.0000000	261.1190500
555.0000000	261.0107100
560.0000000	260.9000000
565.0000000	260.7869000
570.0000000	260.6714300
575.0000000	260.5535700
580.0000000	260.4333300
585.0000000	260.3107100
590.0000000	260.1857100

X	Z
595.0000000	260.0583300
600.0000000	259.9285700
605.0000000	259.7964300
610.0000000	259.6619000
615.0000000	259.5250000
620.0000000	259.3857200
625.0000000	259.2440500
630.0000000	259.1000000
635.0000000	258.9535700
640.0000000	258.8047600
645.0000000	258.6535700
650.00	258.500

NOTES:
1. ALL DIMENSIONS ARE NOMINAL. FOR A FINISHED PART, 1:1 SCALE DOES NOT INCLUDE SHRINKAGE FACTOR.

DATA LIST #1
SEE FIGURE 1 SHEET13

METRIC DIMENSIONS

REVISIONS	CHANGE NO.	CHK	REV.

FIRST USED ON OPTION/MODEL	QTY.	DESCRIPTION	PART NO.	ITEM NO.
VT50	PARTS LIST			

UNLESS OTHERWISE SPECIFIED DIMENSION IN INCHES
TOLERANCES
DECIMALS .XXX ±.005 .XX ±.01 .X ±.1
ANGLES ±0° 30'
REMOVE BURRS AND BREAK SHARP CORNERS SURFACE QUALITY √

DRN. D. Williams DATE 1-21-74
CHK'D DATE
ENG. DATE
PROJ. ENG. DATE
PROD. DATE

digital EQUIPMENT CORPORATION MAYNARD MASSACHUSETTS

TITLE: SHELL VT50

MATERIAL
FINISH
NEXT HIGHER ASSY.
SCALE 1/1
SHEET 23 OF 45

SIZE	CODE	NUMBER	REV.
C	MD	7411540-0-0	A

DIST.

DEC FORM NO. DRC 100-B

"THIS DRAWING AND SPECIFICATIONS, HEREIN, ARE THE PROPERTY OF DIGITAL EQUIPMENT CORPORATION AND SHALL NOT BE REPRODUCED OR COPIED OR USED IN WHOLE OR IN PART AS THE BASIS FOR THE MANUFACTURE OR SALE OF ITEMS WITHOUT WRITTEN PERMISSION.
COPYRIGHT © 1975, DIGITAL EQUIPMENT CORPORATION"

NOTES:
1. ALL DIMENSIONS ARE NOMINAL FOR A FINISHED PART, 1:1 SCALE DOES NOT INCLUDE SHRINKAGE FACTOR
2. X≠Y COORDINATES ARE THE SAME FOR THE ENTIRE WIDTH OF THE SHELL

X	Y
0.0000000	285.0000000
5.0000000	285.0170600
10.0000000	285.0332600
15.0000000	285.0486000
20.0000000	285.0630800
25.0000000	285.0766900
30.0000000	285.0894500
35.0000000	285.1013500
40.0000000	285.1123800
45.0000000	285.1225500
50.0000000	285.1318700
55.0000000	285.1403200
60.0000000	285.1479100
65.0000000	285.1546400
70.0000000	285.1605100
75.0000000	285.1655200
80.0000000	285.1696700
85.0000000	285.1729600
90.0000000	285.1753800
95.0000000	285.1769500
100.0000000	285.1776500
105.0000000	285.1775000
110.0000000	285.1764800
115.0000000	285.1746100
120.0000000	285.1718700
125.0000000	285.1682700
130.0000000	285.1638100
135.0000000	285.1584900
140.0000000	285.1523100
145.0000000	285.1452600
150.0000000	285.1373600
155.0000000	285.1286000
160.0000000	285.1189800
165.0000000	285.1084900
170.0000000	285.0971400
175.0000000	285.0849300
180.0000000	285.0718700
185.0000000	285.0579400
190.0000000	285.0431500
195.0000000	285.0275000
200.0000000	285.0109900
205.0000000	284.9936200
210.0000000	284.9753800
215.0000000	284.9562900
220.0000000	284.9363400
225.0000000	284.9155200
230.0000000	284.8938400
235.0000000	284.8713100
240.0000000	284.8479100
245.0000000	284.8236500
250.0000000	284.7985300
255.0000000	284.7725600
260.0000000	284.7457100
265.0000000	284.7180100
270.0000000	284.6894500
275.0000000	284.6600300
280.0000000	284.6297500
285.0000000	284.5986000
290.0000000	284.5665900

X	Y
295.0000000	284.5337300
300.0000000	284.5000000
305.0000000	284.4654100
310.0000000	284.4299600
315.0000000	284.3936500
320.0000000	284.3564800
325.0000000	284.3184500
330.0000000	284.2795600
335.0000000	284.2398100
340.0000000	284.1991900
345.0000000	284.1577200
350.0000000	284.1153800
355.0000000	284.0721900
360.0000000	284.0281300
365.0000000	283.9832200
370.0000000	283.9374400
375.0000000	283.8908000
380.0000000	283.8433000
385.0000000	283.7949300
390.0000000	283.7457100
395.0000000	283.6956300
400.0000000	283.6446900
405.0000000	283.5928900
410.0000000	283.5402200
415.0000000	283.4866900
420.0000000	283.4323100
425.0000000	283.3770600
430.0000000	283.3209500
435.0000000	283.2639800
440.0000000	283.2061500
445.0000000	283.1474600
450.0000000	283.0879100
455.0000000	283.0275000
460.0000000	282.9662300
465.0000000	282.9040900
470.0000000	282.8411000
475.0000000	282.7772400
480.0000000	282.7125200
485.0000000	282.6469500
490.0000000	282.5805100
495.0000000	282.5132100
500.0000000	282.4450600
505.0000000	282.3760300
510.0000000	282.3061500
515.0000000	282.2354100
520.0000000	282.1638100
525.0000000	282.0913500
530.0000000	282.0180200
535.0000000	281.9438400
540.0000000	281.8687900
545.0000000	281.7928800
550.0000000	281.7161200
555.0000000	281.6384900
560.0000000	281.5600000
565.0000000	281.4806500
570.0000000	281.4004400
575.0000000	281.3193700
580.0000000	281.2374400
585.0000000	281.1546400
590.0000000	281.0709900

X	Y
595.0000000	280.9864700
600.0000000	280.9011000
605.0000000	280.8148600
610.0000000	280.7277700
615.0000000	280.6398100
620.0000000	280.5509900
625.0000000	280.4613100
630.0000000	280.3707700
635.0000000	280.2793700
640.0000000	280.1871100
645.0000000	280.0939800
650.00	280.000

DATA LIST #2
SEE FIGURE 2 SHEET 14

METRIC DIMENSIONS

REVISIONS	CHANGE NO.	REV.
CHK		

DEC FORM NO. DRC 100-B

FIRST USED ON OPTION/MODEL	QTY.	DESCRIPTION	PART NO.	ITEM NO.
VT50		PARTS LIST		

UNLESS OTHERWISE SPECIFIED DIMENSION IN INCHES
TOLERANCES
DECIMALS .005 | ANGLES ±0° 30'
REMOVE BURRS AND BREAK SHARP CORNERS SURFACE QUALITY √

DRN.	DATE 1-21-74	digital EQUIPMENT CORPORATION MAYNARD MASSACHUSETTS
CHK'D.	DATE	
ENG.	DATE	TITLE: SHELL VT50
PROJ. ENG.	DATE	
PROD.	DATE	

MATERIAL
FINISH
NEXT HIGHER ASSY.
SCALE 1/1
SHEET 30 OF 45

SIZE	CODE	NUMBER	REV.
C	MD	7411540-0-0	A

DIST.

SIZE C CODE MD NUMBER 7411540-0-0 REV. A

This drawing and specifications, herein, are the property of Digital Equipment Corporation and shall not be reproduced or copied or used in whole or in part as the basis for the manufacture or sale of items without written permission. COPYRIGHT © 1975
DIGITAL EQUIPMENT CORPORATION

NOTES:
1. ALL DIMENSIONS ARE NOMINAL.
FOR A FINISHED PART, 1:1 SCALE
DOES NOT INCLUDE SHRINKAGE FACTOR

Y	Z
285.0000000	230.0000200
280.0000000	230.7631100
275.0000000	231.5168200
270.0000000	232.2611100
265.0000000	232.9960100
260.0000000	233.7215000
255.0000000	234.4376000
250.0000000	235.1442900
245.0000000	235.8415800
240.0000000	236.5294600
235.0000000	237.2079500
230.0000000	237.8770400
225.0000000	238.5367200
220.0000000	239.1870000
215.0000000	239.8278000
210.0000000	240.4593600
205.0000000	241.0814300
200.0000000	241.6941100
195.0000000	242.2973800
190.0000000	242.8912500
185.0000000	243.4757200
180.0000000	244.0507900
175.0000000	244.6164600
170.0000000	245.1727200
165.0000000	245.7195900
160.0000000	246.2570500
155.0000000	246.7851100
150.0000000	247.3037700
145.0000000	247.8130300
140.0000000	248.3128800
135.0000000	248.8033400
130.0000000	249.2843900
125.0000000	249.7560400
120.0000000	250.2182900
115.0000000	250.6711300
110.0000000	251.1145800
105.0000000	251.5486300
100.0000000	251.9732700
95.0000000	252.3885100
90.0000000	252.7943500
85.0000000	253.1907900
80.0000000	253.5778200
75.0000000	253.9554600
70.0000000	254.3236900
65.0000000	254.6825200
60.0000000	255.0319500
55.0000000	255.3719800
50.0000000	255.7026100
45.0000000	256.0238300
40.0000000	256.3356600
35.0000000	256.6380800
30.0000000	256.9311000
25.0000000	257.2147100
20.0000000	257.4889300
15.0000000	257.7537500
10.0000000	258.0091600
5.0000000	258.2551700
0.00	258.4917800

METRIC DIMENSIONS

DATA LIST #3
SEE FIGURE 3 SHEET 15

FIRST USED ON OPTION/MODEL	QTY.	DESCRIPTION	PART NO.	ITEM NO.
VT5Ø		PARTS LIST		

UNLESS OTHERWISE SPECIFIED DIMENSION IN INCHES
TOLERANCES

DECIMALS	ANGLES
.xxx = .005 .xx = .02 .x = .1	±0° 30'

REMOVE BURRS AND BREAK SHARP CORNERS SURFACE QUALITY √

MATERIAL

FINISH

		DATE
DRN.	[illegible]	18 JAN 74
CHK'D.	[illegible]	[illegible]
ENG.	[illegible]	[illegible]
PROJ. ENG.	[illegible]	[illegible]
PROD.	[illegible]	[illegible]

NEXT HIGHER ASSY.

SCALE 1:1
SHEET 31 OF 45

digital EQUIPMENT CORPORATION
MAYNARD MASSACHUSETTS

TITLE
SHELL VT5Ø

SIZE	CODE	NUMBER	REV.
B	MD	7411540-0-0	A

DIST.

REVISIONS: REV. | CHANGE NO. | CHK

DCC 16-(325)-1086-1A-R373
DRB 100

This drawing and specifications, herein, are the property of Digital Equipment Corporation and shall not be reproduced or copied or used in whole or in part as the basis for the manufacture or sale of items without written permission. COPYRIGHT © 1975
DIGITAL EQUIPMENT CORPORATION

REV.	NUMBER	SIZE	CODE
A	7411540-0-0	B	MD

NOTES:
1. ALL DIMENSIONS ARE NOMINAL FOR A FINISHED PART, 1:1 SCALE
DOES NOT INCLUDE SHRINKAGE FACTOR

Z	Y
230.5714300	285.1318700
231.3496000	280.1318700
232.1185200	275.1318700
232.8779300	270.1318700
233.6279800	265.1318700
234.3685900	260.1318700
235.0997900	255.1318700
235.8215800	250.1318700
236.5339600	245.1318700
237.2369300	240.1318700
237.9304900	235.1318700
238.6146400	230.1318700
239.2893800	225.1318700
239.9547000	220.1318700
240.6106200	215.1318700
241.2571300	210.1318700
241.8942300	205.1318700
242.5219200	200.1318700
243.1402000	195.1318700
243.7490600	190.1318700
244.3485200	185.1318700
244.9385700	180.1318700
245.5192100	175.1318700
246.0904300	170.1318700
246.6522500	165.1318700
247.2046500	160.1318700
247.7476500	155.1318700
248.2812400	150.1318700
248.8054100	145.1318700
249.3201800	140.1318700
249.8255300	135.1318700
250.3214900	130.1318700
250.8080200	125.1318700
251.2851400	120.1318700
251.7528500	115.1318700
252.2111600	110.1318700
252.6601500	105.1318700
253.0995400	100.1318700
253.5296100	95.1318660
253.9502700	90.1318660
254.3615200	85.1318660
254.7633700	80.1318660
255.1558000	75.1318660
255.5388200	70.1318660
255.9124300	65.1318660
256.2766400	60.1318660
256.6314300	55.1318660
256.9768100	50.1318660
257.3127800	45.1318660
257.6393400	40.1318660
257.9564900	35.1318660
258.2642400	30.1318660
258.5625800	25.1318660
258.8514800	23.1318660
259.1309900	15.1318660
259.4010900	10.1318660
259.6617900	5.1318665
259.9130600	.1318665

METRIC DIMENSIONS

DATA LIST #4
SEE FIGURE 4 SHEET 16

REVISIONS	REV.	CHANGE NO.	CHK

FIRST USED ON OPTION/MODEL	QTY.	DESCRIPTION	PART NO.	ITEM NO.
VT50	PARTS LIST			

UNLESS OTHERWISE SPECIFIED DIMENSION IN INCHES
TOLERANCES

DECIMALS	ANGLES
.xxx = .005	±0° 30'
.xx = .02	
.x = .1	

REMOVE BURRS AND BREAK SHARP CORNERS SURFACE QUALITY √

MATERIAL

FINISH

		DATE
DRN.	[illegible]	1-12-74
CHK'D.	[illegible]	DATE
ENG.	[illegible]	DATE
PROJ. ENG.	[illegible]	DATE
PROD.	[illegible]	DATE

NEXT HIGHER ASSY.

SCALE 1/1
SHEET 3c OF 45

digital EQUIPMENT CORPORATION MAYNARD MASSACHUSETTS

TITLE
SHELL VT50

SIZE	CODE	NUMBER	REV.
B	MD	7411540-0-0	A

DIST.

DEC 16-(325)-1080-1A-R373
DAB 100

This drawing and specifications, herein, are the property of Digital Equipment Corporation and shall not be reproduced or copied or used in whole or in part as the basis for the manufacture or sale of items without written permission. COPYRIGHT © 1975

REV.	NUMBER	SIZE	CODE
A	7411540-0-0	B	MD

NOTES:
1. ALL DIMENSIONS ARE NOMINAL FOR A FINISHED PART, SCALE 1:1
DOES NOT INCLUDE SHRINKAGE FACTOR

METRIC DIMENSIONS

Y	Z
285.1776500	231.8470100
280.1776500	231.8386100
275.1776500	232.0202000
270.1776500	233.3923700
265.1776500	234.1551300
260.1776500	234.9084600
255.1776500	235.6523800
250.1776500	236.3868800
245.1776500	237.1119700
240.1776500	237.8276300
235.1776500	238.5338800
230.1776500	239.2307100
225.1776500	239.9181200
220.1776500	240.5961200
215.1776500	241.2647003
210.1776500	241.9238503
205.1776500	242.5736000
200.1776500	243.2139200
195.1776500	243.8448300
190.1776500	244.4663200
185.1776500	245.0783900
180.1776500	245.6810400
175.1776500	246.2742000
170.1776500	246.8581300
165.1776500	247.4325200
160.1776500	247.9974800
155.1776500	248.5530500
150.1776500	249.0991900
145.1776500	249.6359200
140.1776500	250.1632400
135.1776500	250.6811300
130.1776500	251.1896100
125.1776500	251.6886700
120.1776500	252.1783100
115.1776500	252.6585400
110.1776500	253.1293400
105.1776500	253.5907300
100.1776500	254.0427000
95.1776540	254.4852600
90.1776540	254.9183900
85.1776540	255.3421100
80.1776540	255.7564100
75.1776540	256.1612900
70.1776540	256.5567600
65.1776540	256.9428100
60.1776540	257.3194400
55.1776540	257.6866500
50.1776540	258.0444400
45.1776540	258.3928200
40.1776540	258.7317800
35.1776540	259.0613200
30.1776540	259.3814500
25.1776540	259.6921500
20.1776540	259.9934400
15.1776540	260.2853100
10.1776540	260.5677600
5.1776543	260.8408000
.1776543	261.1044200

DATA LIST #5
SEE FIGURE 5 SHEET 17

REVISIONS	REV.	CHANGE NO.	CHK

DEC 16-(325)-1080-1A-R373
DRB 100

FIRST USED ON OPTION/MODEL	QTY.	DESCRIPTION	PART NO.	ITEM NO.
VT50		PARTS LIST		

UNLESS OTHERWISE SPECIFIED DIMENSION IN INCHES		DRN.	DATE 1-10-74
TOLERANCES		CHK'D.	DATE
DECIMALS	ANGLES	ENG.	DATE
.xxx = .005 .xx = .02 .x = .1	±0° 30'	PROJ. ENG.	DATE
REMOVE BURRS AND BREAK SHARP CORNERS SURFACE QUALITY √		PROD.	DATE
MATERIAL		NEXT HIGHER ASSY.	
FINISH		SCALE 1/1	
		SHEET 33 OF 45	

digital EQUIPMENT CORPORATION MAYNARD MASSACHUSETTS

TITLE
SHELL VT50

SIZE	CODE	NUMBER	REV.
B	MD	7411540-0-0	A

DIST.

This drawing and specifications, herein, are the property of Digital Equipment Corporation and shall not be reproduced or copied or used in whole or in part as the basis for the manufacture or sale of items without written permission. COPYRIGHT © 1975
DIGITAL EQUIPMENT CORPORATION

NOTES:
1. ALL DIMENSIONS ARE NOMINAL FOR A FINISHED PART, 1:1 SCALE DOES NOT INCLUDE SHRINKAGE FACTOR.

METRIC DIMENSIONS

X	Y	Z
285.1373600	231.4285900	262.0557700
280.1373600	232.2297700	
275.1373600	233.0215300	
270.1373600	233.8038600	
265.1373600	234.5767700	
260.1373600	235.3402600	
255.1373600	236.0943200	
250.1373600	236.8389600	
245.1373600	237.5741800	
240.1373600	238.2999700	
235.1373600	239.0163400	
230.1373600	239.7232800	
225.1373600	240.4208000	
220.1373600	241.1089000	
215.1373600	241.7875700	
210.1373600	242.4568200	
205.1373600	243.1166500	
200.1373600	243.7670500	
195.1373600	244.4080300	
190.1373600	245.0395900	
185.1373600	245.6617200	
180.1373600	246.2744200	
175.1373600	246.8777100	
170.1373600	247.4715700	
165.1373600	248.0560100	
160.1373600	248.6310200	
155.1373600	249.1966100	
150.1373600	249.7527700	
145.1373600	250.2995100	
140.1373600	250.8368300	
135.1373600	251.3647300	
130.1373600	251.8831900	
125.1373600	252.3922400	
120.1373600	252.8918600	
115.1373600	253.3820600	
110.1373600	253.8628400	
105.1373600	254.3341900	
100.1373600	254.7961200	
95.1373600	255.2486300	
90.1373600	255.6917100	
85.1373600	256.1253600	
80.1373600	256.5495900	
75.1373600	256.9644100	
70.1373600	257.3697900	
65.1373600	257.7657500	
60.1373600	258.1522900	
55.1373600	258.5294100	
50.1373600	258.8971100	
45.1373600	259.2553600	
40.1373600	259.6042100	
35.1373600	259.9436300	
30.1373600	260.2736200	
25.1373600	260.5942000	
20.1373600	260.9053500	
15.1373600	261.2070700	
10.1373600	261.4993700	
5.1373634	261.7822500	
.1373634	262.0557700	

DATA SHEET #6
SEE FIGURE 6 SHEET 18

FIRST USED ON OPTION/MODEL	QTY.	DESCRIPTION	PART NO.	ITEM NO.
VT50		PARTS LIST		

UNLESS OTHERWISE SPECIFIED DIMENSION IN INCHES	DRN.	DATE 1-13-74
TOLERANCES	CHK'D.	DATE
DECIMALS: .xxx = .005, .xx = .02, .x = .1 / ANGLES: ±0° 30'	ENG.	DATE
	PROJ. ENG.	DATE
REMOVE BURRS AND BREAK SHARP CORNERS SURFACE QUALITY √	PROD.	DATE
MATERIAL	NEXT HIGHER ASSY.	
FINISH	SCALE 1/1	
	SHEET 34 OF 45	

digital EQUIPMENT CORPORATION MAYNARD MASSACHUSETTS

TITLE: SHELL VT50

SIZE	CODE	NUMBER	REV.
B	MD	7411540-0-0	A

DIST.

REVISIONS	REV.	CHANGE NO.	CHK
	A	7411540-0-C	

DEC 16-(325)-1040-1A-R373
DRB 100

This drawing and specifications, herein, are the property of Digital Equipment Corporation and shall not be reproduced or copied or used in whole or in part as the basis for the manufacture or sale of items without written permission. COPYRIGHT © 1975
DIGITAL EQUIPMENT CORPORATION

NOTES:
1. ALL DIMENSIONS ARE NOMINAL FOR A FINISHED PART, 1:1 SCALE
DOES NOT INCLUDE SHRINKAGE FACTOR.

Y	Z
285.0109900	231.7143000
280.0109900	232.5232500
275.0109900	233.3227700
270.0109900	234.1128700
265.0109900	234.8935400
260.0109900	235.6647700
255.0109900	236.4265800
250.0109900	237.1789600
245.0109900	237.9219200
240.0109900	238.6554400
235.0109900	239.3795400
230.0109900	240.0942000
225.0109900	240.7994400
220.0109900	241.4952500
215.0109900	242.1816300
210.0109900	242.8585900
205.0109900	243.5261200
200.0109900	244.1842100
195.0109900	244.8328800
190.0109900	245.4721200
185.0109900	246.1019300
180.0109900	246.7223100
175.0109900	247.3332700
170.0109900	247.9348000
165.0109900	248.5268900
160.0109900	249.1095600
155.0109900	249.6828100
150.0109900	250.2466200
145.0109900	250.8010000
140.0109900	251.3459600
135.0109900	251.8814800
130.0109900	252.4075900
125.0109900	252.9242600
120.0109900	253.4315000
115.0109900	253.9293100
110.0109900	254.4177000
105.0109900	254.8966600
100.0109900	255.3661900
95.0109900	255.8262900
90.0109900	256.2769500
85.0109900	256.7182000
80.0109900	257.1500100
75.0109900	257.5724000
70.0109900	257.9853600
65.0109900	258.3888900
60.0109900	258.7829900
55.0109900	259.1676600
50.0109900	259.5429100
45.0109900	259.9087300
40.0109900	260.2651100
35.0109900	260.6120700
30.0109900	260.9496000
25.0109900	261.2777100
20.0109900	261.5963800
15.0109900	261.9056200
10.0109900	262.2054400
5.0109901	262.4958300
.0109901	262.7767900

METRIC DIMENSIONS

DATA LIST #7
SEE FIGURE 7 SHEET 19

FIRST USED ON OPTION/MODEL	QTY.	DESCRIPTION	PART NO.	ITEM NO.
VT50		PARTS LIST		

UNLESS OTHERWISE SPECIFIED DIMENSION IN INCHES
TOLERANCES

DECIMALS	ANGLES
.xxx = .005	±0° 30'
.xx = .02	
.x = .1	

REMOVE BURRS AND BREAK SHARP. CORNERS SURFACE QUALITY √

MATERIAL

FINISH

		DATE
DRN.	[signature]	1-21-73
CHK'D.	[signature]	DATE
ENG.	[signature]	DATE
PROJ. ENG.	[signature]	DATE
PROD.	[signature]	DATE

NEXT HIGHER ASSY.

SCALE

SHEET 35 OF 45

digital EQUIPMENT CORPORATION
MAYNARD MASSACHUSETTS

TITLE
SHELL VT50

SIZE	CODE	NUMBER	REV.
B	MD	7411540-0-0	A

DIST.

REVISIONS: REV. | CHANGE NO. | CHK

DEC 16-(325)-1040-1A-R373
DRB 100

This drawing and specifications, herein, are the property of Digital Equipment Corporation and shall not be reproduced or copied or used in whole or in part as the basis for the manufacture or sale of items without written permission. COPYRIGHT © 1975
DIGITAL EQUIPMENT CORPORATION

NOTES:
1. ALL DIMENSIONS ARE NOMINAL FOR A FINISHED PART, 1:1 SCALE DOES NOT INCLUDE SHRINKAGE FACTOR

Y	Z
284,7985300	231,9047700
279,7985300	232,7190800
274,7985300	233,5237600
269,7985300	234,3194100
264,7985300	235,1054300
259,7985300	235,8820100
254,7985300	236,6491600
249,7985300	237,4060900
244,7985300	238,1551800
239,7985300	238,8940400
234,7985300	239,6234600
229,7985300	240,3434600
224,7985300	241,0540200
219,7985300	241,7551600
214,7985300	242,4468600
209,7985300	243,1291300
204,7985300	243,8019600
199,7985300	244,4653700
194,7985300	245,1193400
189,7985300	245,7638800
184,7985300	246,3989900
179,7985300	247,0246700
174,7985300	247,6409200
169,7985300	248,2477400
164,7985300	248,8451200
159,7985300	249,4330700
154,7985300	250,0115900
149,7985300	250,5806800
144,7985300	251,1403400
139,7985300	251,6905600
134,7985300	252,2313500
129,7985300	252,7627200
124,7985300	253,2846500
119,7985300	253,7971400
114,7985300	254,3002100
109,7985300	254,7938500
104,7985300	255,2780500
99,7985340	255,7528200
94,7985340	256,2181600
89,7985340	256,6740600
84,7985340	257,1205400
79,7985340	257,5575900
74,7985340	257,9852000
69,7985340	258,4033000
64,7985340	258,8121300
59,7985340	259,2114500
54,7985340	259,6013400
49,7985340	259,9817900
44,7985340	260,3520100
39,7985340	260,7144100
34,7985340	261,0665600
29,7985340	261,4092900
24,7985340	261,7425800
19,7985340	262,0664500
14,7985340	262,3808900
9,7985344	262,6858800
4,7985344	262,9814500

METRIC DIMENSIONS

DATA LIST #8
SEE FIGURE 8 SHEET 20

FIRST USED ON OPTION/MODEL	QTY.	DESCRIPTION	PART NO.	ITEM NO.
VT50		PARTS LIST		

UNLESS OTHERWISE SPECIFIED DIMENSION IN INCHES
TOLERANCES

DECIMALS	ANGLES
.xxx = .005 .xx = .02 .x = .1	±0° 30'

REMOVE BURRS AND BREAK SHARP CORNERS SURFACE QUALITY √

MATERIAL

FINISH

		DATE
DRN.	[signature]	1-21-[illegible]
CHK'D.	[signature]	
ENG.	[signature]	
PROJ. ENG.	[signature]	
PROD.	[signature]	

NEXT HIGHER ASSY.

SCALE 1 / 1
SHEET 36 OF 45

digital EQUIPMENT CORPORATION
MAYNARD MASSACHUSETTS

TITLE
SHELL VT50

SIZE	CODE	NUMBER	REV.
B	MD	7411540-0-0	A

DIST.

REVISIONS: REV. / CHANGE NO. / CHK

DCC 16-(325)-1040-1A-R373
DRB 100

This drawing and specifications, herein, are the property of Digital Equipment Corporation and shall not be reproduced or copied or used in whole or in part as the basis for the manufacture or sale of items without written permission. COPYRIGHT © 1975
DIGITAL EQUIPMENT CORPORATION

NOTES:
1. ALL DIMENSIONS ARE NOMINAL FOR A FINISHED PART, 1:1 SCALE DOES NOT INCLUDE SHRINKAGE FACTOR.

Y	Z
284,5000000	232,0000100
279,5000000	232,8171800
274,5000000	233,6249200
269,5000000	234,4232300
264,5000000	235,2121000
259,5000000	235,9915400
254,5000000	236,7615400
249,5000000	237,5221100
244,5000000	238,2732500
239,5000000	239,0149600
234,5000000	239,7472300
229,5000000	240,4700600
224,5000000	241,1834700
219,5000000	241,8874400
214,5000000	242,5819800
209,5000000	243,2670800
204,5000000	243,9427500
199,5000000	244,6089900
194,5000000	245,2657900
189,5000000	245,9131600
184,5000000	246,5511000
179,5000000	247,1796000
174,5000000	247,7986700
169,5000000	248,4083000
164,5000000	249,0085000
159,5000000	249,5992800
154,5000000	250,1806100
149,5000000	250,7525100
144,5000000	251,3149800
139,5000000	251,8680200
134,5000000	252,4116200
129,5000000	252,9457900
124,5000000	253,4705200
119,5000000	253,9858200
114,5000000	254,4916900
109,5000000	254,9881300
104,5000000	255,4751200
99,5000000	255,9526900
94,5000000	256,4208300
89,5000000	256,8795300
84,5000000	257,3288000
79,5000000	257,7686300
74,5000000	258,1990300
69,5000000	258,6200000
64,5000000	259,0315300
59,5000000	259,4336300
54,5000000	259,8263000
49,5000000	260,2095300
44,5000000	260,5833300
39,5000000	260,9477000
34,5000000	261,3026300
29,5000000	261,6481300
24,5000000	261,9842000
19,5000000	262,3108300
14,5000000	262,6280300
9,5000000	262,9357900
4,5000000	263,2341200

METRIC DIMENSIONS

DATA LIST #9
SEE FIGURE 9 SHEET 21

FIRST USED ON OPTION/MODEL	QTY.	DESCRIPTION	PART NO.	ITEM NO.
VT50		PARTS LIST		

UNLESS OTHERWISE SPECIFIED DIMENSION IN INCHES
TOLERANCES
DECIMALS: .xxx = .005, .xx = .02, .x = .1
ANGLES: ±0° 30'
REMOVE BURRS AND BREAK SHARP CORNERS SURFACE QUALITY √
MATERIAL
FINISH

DRN. DATE 1-21-74
CHK'D. DATE
ENG. DATE
PROJ. ENG. DATE
PROD. DATE
NEXT HIGHER ASSY.
SCALE 1 : 1
SHEET 37 OF 45

digital EQUIPMENT CORPORATION
MAYNARD MASSACHUSETTS

TITLE
SHELL VT50

SIZE	CODE	NUMBER	REV.
B	MD	7411540-0-0	A

DIST.

REVISIONS: REV. / CHANGE NO. / CHK

DEC 16-(325)-1080-1A-R373
DRB 100

This drawing and specifications, herein, are the property of Digital Equipment Corporation and shall not be reproduced or copied or used in whole or in part as the basis for the manufacture or sale of items without written permission. COPYRIGHT © 1975
DIGITAL EQUIPMENT CORPORATION

REV.	NUMBER	SIZE	CODE
A	7411540-0-0	B	MD

NOTES:
1. ALL DIMENSIONS ARE NOMINAL FOR A FINISHED PART, 1:1 SCALE DOES NOT INCLUDE SHRINKAGE FACTOR.

Z	Y
231.9990000	284.1153600
232.8175200	279.1153600
233.6256100	274.1153600
234.4242700	269.1153600
235.2135000	264.1153600
235.9933000	259.1153600
236.7636600	254.1153600
237.5245900	249.1153600
238.2760800	244.1153600
239.0181500	239.1153600
239.7507700	234.1153600
240.4739700	229.1153600
241.1877300	224.1153600
241.8920500	219.1153600
242.5869400	214.1153600
243.2724000	209.1153600
243.9484300	204.1153600
244.6150200	199.1153600
245.2721800	194.1153600
245.9199000	189.1153600
246.5581900	184.1153600
247.1870500	179.1153600
247.8064700	174.1153600
248.4164600	169.1153600
249.0170200	164.1153600
249.6081400	159.1153600
250.1898300	154.1153600
250.7621000	149.1153600
251.3249400	144.1153600
251.8782900	139.1153600
252.4222400	134.1153600
252.9567000	129.1153600
253.4818400	124.1153600
253.9975000	119.1153600
254.5037200	114.1153600
255.0005000	109.1153600
255.4878500	104.1153600
255.9657700	99.1153600
256.4342500	94.1153600
256.8933000	89.1153600
257.3429200	84.1153600
257.7831000	79.1153600
258.2138500	74.1153600
258.6351700	69.1153600
259.0470500	64.1153600
259.4495000	59.1153600
259.8425100	54.1153600
260.2260900	49.1153600
260.6002400	44.1153600
260.9649500	39.1153600
261.3202300	34.1153600
261.6660800	29.1153600
262.0024900	24.1153600
262.3294700	19.1153600
262.6470100	14.1153600
262.9551200	9.1153831
263.2538000	4.1153831

METRIC DIMENSIONS

DATA LIST # 10
SEE FIGURE 10 SHEET 22

REVISIONS	REV.	CHANGE NO.	CHK

FIRST USED ON OPTION/MODEL	QTY.	DESCRIPTION	PART NO.	ITEM NO.
VT50		PARTS LIST		

UNLESS OTHERWISE SPECIFIED DIMENSION IN INCHES
TOLERANCES

DECIMALS	ANGLES
.xxx = .005 .xx = .02 .x = .1	±0° 30'

REMOVE BURRS AND BREAK SHARP CORNERS SURFACE QUALITY √

MATERIAL

FINISH

		DATE
DRN.	[illegible]	1-21-74
CHK'D	[illegible]	DATE
ENG.	[illegible]	DATE
PROJ. ENG.	[illegible]	DATE
PROD.	[illegible]	DATE
NEXT HIGHER ASSY.		
SCALE	1/1	
SHEET 38	OF 45	

digital EQUIPMENT CORPORATION MAYNARD MASSACHUSETTS

TITLE
SHELL VT50

SIZE	CODE	NUMBER	REV.
B	MD	7411540-0-0	A

DIST.

DEC 16-(325)-1040-1A-R373
DRB 100

This drawing and specifications, herein, are the property of Digital Equipment Corporation and shall not be reproduced or copied or used in whole or in part as the basis for the manufacture or sale of items without written permission. COPYRIGHT © 1975
DIGITAL EQUIPMENT CORPORATION

NOTES:
1. ALL DIMENSIONS ARE NOMINAL FOR A FINISHED PART, 1:1 SCALE DOES NOT INCLUDE SHRINKAGE FACTOR.

Z	Y
1	285.6446900
2	278.6446900
3	270.6446900
4	263.6446900
5	256.6446900
6	248.6446900
7	241.6446900
8	233.6446900
9	226.6446900
10	218.6446900
11	211.6446900
12	203.6446900
13	196.6446900
14	188.6446900
15	181.6446900
16	173.6446900
17	166.6446900
18	158.6446900
19	151.6446900
20	143.6446900
21	136.6446900
22	128.6446900
23	121.6446900
24	113.6446900
25	106.6446900
26	98.6446900
27	91.6446900
28	83.6446900
29	76.6446900
30	68.6446900
31	61.6446900
32	53.6446900
33	46.6446900
34	38.6446900
35	31.6446900
36	23.6446900
37	16.6446900
38	8.6446900
39	1.6446900
40	285.9047768
41	278.6446910
42	270.6446910
43	263.6446910
44	256.6446910
45	248.6446910
46	241.6446910
47	233.6446910
48	226.6446910
49	218.6446910
50	211.6446910
51	203.6446910
52	196.6446910
53	188.6446910
54	181.6446910
55	173.6446910
56	166.6446910
57	158.6446910
58	151.6446910
59	143.6446910
60	136.6446910
61	128.6446910
62	121.6446910
63	113.6446910
64	106.6446910
65	98.6446910
66	91.6446910
67	83.6446910
68	76.6446910
69	68.6446910
70	61.6446910
71	53.6446910
72	46.6446910
73	38.6446910
74	31.6446910
75	23.6446910
76	16.6446910
77	8.6446910
78	1.6446910
79	285.6446915
80	278.6446915
81	270.6446915
82	263.6446915
83	256.6446915
84	248.6446915
85	241.6446915
86	233.6446915
87	226.6446915
88	218.6446915
89	211.6446915
90	203.6446915
91	196.6446915
92	188.6446915
93	181.6446915
94	173.6446915
95	166.6446915
96	158.6446915
97	151.6446915
98	143.6446915
99	136.6446915
100	128.6446915
101	121.6446915
102	113.6446915
103	106.6446915
104	98.6446915
105	91.6446915
106	83.6446915
107	76.6446915
108	68.6446915
109	61.6446915
110	53.6446915
111	46.6446915
112	38.6446915
113	31.6446915
114	23.6446915
115	16.6446915
116	8.6446915
117	1.6446915
118	285.9047768
119	278.6446920
120	270.6446920
121	263.6446920
122	256.6446920
123	248.6446920
124	241.6446920
125	233.6446920
126	226.6446920
127	218.6446920
128	211.6446920
129	203.6446920
130	196.6446920
131	188.6446920
132	181.6446920
133	173.6446920
134	166.6446920
135	158.6446920
136	151.6446920
137	143.6446920
138	136.6446920
139	128.6446920
140	121.6446920
141	113.6446920
142	106.6446920
143	98.6446920
144	91.6446920
145	83.6446920
146	76.6446920
147	68.6446920
148	61.6446920
149	53.6446920
150	46.6446920
151	38.6446920
152	31.6446920
153	23.6446920
154	16.6446920
155	8.6446920
156	1.6446920
157	285.9047768
158	278.6446930
159	270.6446930
160	263.6446930
161	256.6446930
162	248.6446930
163	241.6446930
164	233.6446930
165	226.6446930
166	218.6446930
167	211.6446930
168	203.6446930
169	196.6446930
170	188.6446930
171	181.6446930
172	173.6446930
173	166.6446930
174	158.6446930
175	151.6446930
176	143.6446930
177	136.6446930
178	128.6446930
179	121.6446930
180	113.6446930
181	106.6446930
182	98.6446930
183	91.6446930
184	83.6446930
185	76.6446930
186	68.6446930
187	61.6446930
188	53.6446930
189	46.6446930
190	38.6446930
191	31.6446930
192	23.6446930
193	16.6446930
194	8.6446930
195	1.6446930
196	285.9047768
197	278.6446940
198	270.6446940
199	263.6446940
200	256.6446940
201	248.6446940
202	241.6446940
203	233.6446940
204	226.6446940
205	218.6446940
206	211.6446940
207	203.6446940
208	196.6446940
209	188.6446940
210	181.6446940
211	173.6446940
212	166.6446940
213	158.6446940
214	151.6446940
215	143.6446940
216	136.6446940
217	128.6446940
218	121.6446940
219	113.6446940
220	106.6446940
221	98.6446940
222	91.6446940
223	83.6446940
224	76.6446940
225	68.6446940
226	61.6446940
227	53.6446940
228	46.6446940
229	38.6446940
230	31.6446940
231	23.6446940
232	16.6446940
233	8.6446940
234	1.6446940
235	285.9047768
236	278.6446950
237	270.6446950
238	263.6446950
239	256.6446950
240	248.6446950
241	241.6446950
242	233.6446950
243	226.6446950
244	218.6446950
245	211.6446950
246	203.6446950
247	196.6446950
248	188.6446950
249	181.6446950
250	173.6446950
251	166.6446950
252	158.6446950
253	151.6446950
254	143.6446950
255	136.6446950
256	128.6446950
257	121.6446950
258	113.6446950
259	106.6446950
260	98.6446950
261	91.6446950
262	83.6446950
263	76.6446950
264	68.6446950
265	61.6446950
266	53.6446950
267	46.6446950
268	38.6446950
269	31.6446950
270	23.6446950
271	16.6446950
272	8.6446950
273	1.6446950
274	285.9047768
275	278.6446960
276	270.6446960
277	263.6446960
278	256.6446960
279	248.6446960
280	241.6446960
281	233.6446960
282	226.6446960
283	218.6446960
284	211.6446960
285	203.6446960
286	196.6446960
287	188.6446960
288	181.6446960
289	173.6446960
290	166.6446960
291	158.6446960
292	151.6446960
293	143.6446960
294	136.6446960
295	128.6446960
296	121.6446960
297	113.6446960
298	106.6446960
299	98.6446960
300	91.6446960
301	83.6446960
302	76.6446960
303	68.6446960
304	61.6446960
305	53.6446960
306	46.6446960
307	38.6446960
308	31.6446960
309	23.6446960
310	16.6446960
311	8.6446960
312	1.6446960
313	285.9047768
314	278.6446970
315	270.6446970
316	263.6446970
317	256.6446970
318	248.6446970
319	241.6446970
320	233.6446970
321	226.6446970
322	218.6446970
323	211.6446970
324	203.6446970
325	196.6446970
326	188.6446970
327	181.6446970
328	173.6446970
329	166.6446970
330	158.6446970
331	151.6446970
332	143.6446970
333	136.6446970
334	128.6446970
335	121.6446970
336	113.6446970
337	106.6446970
338	98.6446970
339	91.6446970
340	83.6446970
341	76.6446970
342	68.6446970
343	61.6446970
344	53.6446970
345	46.6446970
346	38.6446970
347	31.6446970
348	23.6446970
349	16.6446970
350	8.6446970
351	1.6446970
352	285.9047768
353	278.6446980
354	270.6446980
355	263.6446980
356	256.6446980
357	248.6446980
358	241.6446980
359	233.6446980
360	226.6446980
361	218.6446980
362	211.6446980
363	203.6446980
364	196.6446980
365	188.6446980
366	181.6446980
367	173.6446980
368	166.6446980
369	158.6446980
370	151.6446980
371	143.6446980
372	136.6446980
373	128.6446980
374	121.6446980
375	113.6446980
376	106.6446980
377	98.6446980
378	91.6446980
379	83.6446980
380	76.6446980
381	68.6446980
382	61.6446980
383	53.6446980
384	46.6446980
385	38.6446980
386	31.6446980
387	23.6446980
388	16.6446980
389	8.6446980
390	1.6446980
391	285.9047768
392	278.6446990
393	270.6446990
394	263.6446990
395	256.6446990
396	248.6446990
397	241.6446990
398	233.6446990
399	226.6446990
400	218.6446990
401	211.6446990
402	203.6446990
403	196.6446990
404	188.6446990
405	181.6446990
406	173.6446990
407	166.6446990
408	158.6446990
409	151.6446990
410	143.6446990
411	136.6446990
412	128.6446990
413	121.6446990
414	113.6446990
415	106.6446990
416	98.6446990
417	91.6446990
418	83.6446990
419	76.6446990
420	68.6446990
421	61.6446990
422	53.6446990
423	46.6446990
424	38.6446990
425	31.6446990
426	23.6446990
427	16.6446990
428	8.6446990
429	1.6446990
430	285.9047768
431	278.6447000
432	270.6447000
433	263.6447000
434	256.6447000
435	248.6447000
436	241.6447000
437	233.6447000
438	226.6447000
439	218.6447000
440	211.6447000
441	203.6447000
442	196.6447000
443	188.6447000
444	181.6447000
445	173.6447000
446	166.6447000
447	158.6447000
448	151.6447000
449	143.6447000
450	136.6447000
451	128.6447000
452	121.6447000
453	113.6447000
454	106.6447000
455	98.6447000
456	91.6447000
457	83.6447000
458	76.6447000
459	68.6447000
460	61.6447000
461	53.6447000
462	46.6447000
463	38.6447000
464	31.6447000
465	23.6447000
466	16.6447000
467	8.6447000
468	1.6447000
469	285.9047768
470	278.6447010
471	270.6447010
472	263.6447010
473	256.6447010
474	248.6447010
475	241.6447010
476	233.6447010
477	226.6447010
478	218.6447010
479	211.6447010
480	203.6447010
481	196.6447010
482	188.6447010
483	181.6447010
484	173.6447010
485	166.6447010
486	158.6447010
487	151.6447010
488	143.6447010
489	136.6447010
490	128.6447010
491	121.6447010
492	113.6447010
493	106.6447010
494	98.6447010
495	91.6447010
496	83.6447010
497	76.6447010
498	68.6447010
499	61.6447010
500	53.6447010
501	46.6447010
502	38.6447010
503	31.6447010
504	23.6447010
505	16.6447010
506	8.6447010
507	1.6447010
508	285.9047768
509	278.6447020
510	270.6447020
511	263.6447020
512	256.6447020

METRIC DIMENSIONS

DATA LIST #11
SEE FIGURE 11 SHEET 23

REVISIONS	REV.	CHANGE NO.	CHK
	A	7411540-0-0	

FIRST USED ON OPTION/MODEL	QTY.	DESCRIPTION	PART NO.	ITEM NO.
VT50	PARTS LIST			

UNLESS OTHERWISE SPECIFIED DIMENSION IN INCHES
TOLERANCES
DECIMALS: .XXX = .005, .XX = .02, .X = .1 | ANGLES: ±0° 30'
REMOVE BURRS AND BREAK SHARP CORNERS SURFACE QUALITY √
MATERIAL
FINISH

DRN. D. Miller DATE 1-21-74
CHK'D. DATE
ENG. DATE
PROJ. ENG. DATE
PROD. DATE
NEXT HIGHER ASSY.
SCALE 1/1
SHEET 39 OF 45

digital EQUIPMENT CORPORATION MAYNARD MASSACHUSETTS

TITLE
SHELL VT50

SIZE	CODE	NUMBER	REV.
B	MD	7411540-0-0	A

DIST.

DEC 16-(325)-1080-1A-R373
DRB 100

This drawing and specifications, herein, are the property of Digital Equipment Corporation and shall not be reproduced or copied or used in whole or in part as the basis for the manufacture or sale of items without written permission. COPYPIGHT © 1975
DIGITAL EQUIPMENT CORPORATION

REV.	NUMBER	SIZE	CODE
A	7411540-0-0	B	MD

NOTES:
1. ALL DIMENSIONS ARE NOMINAL FOR A FINISH PART, 1:1 SCALE DOES NOT INCLUDE SHRINKAGE FACTOR.

Z	Y
1	255.8879100
2	254.8879100
3	253.8879100
4	252.8879100
5	251.8879100
6	250.8879100
7	249.8879100
8	248.8879100
9	247.8879100
10	246.8879100
11	245.8879100
12	244.8879100
13	243.8879100
14	242.8879100
15	241.8879100
16	240.8879100
17	239.8879100
18	238.8879100
19	237.8879100
20	236.8879100
21	235.8879100
22	234.8879100
23	233.8879100
24	232.8879100
25	231.8879100
26	230.8879100
27	229.8879100
28	228.8879100
29	227.8879100
30	226.8879100
31	225.8879100
32	224.8879100
33	223.8879100
34	222.8879100
35	221.8879100
36	220.8879100
37	219.8879100
38	218.8879100
39	217.8879100
40	216.8879100
41	215.8879100
42	214.8879100
43	213.8879100
44	212.8879100
45	211.8879100
46	210.8879100
47	209.8879100
48	208.8879100
49	207.8879100
50	206.8879100
51	205.8879100
52	204.8879100
53	203.8879100
54	202.8879100
55	201.8879100
56	200.8879100
57	199.8879100
58	198.8879100
59	197.8879100
60	196.8879100
61	195.8879100
62	194.8879100
63	193.8879100
64	192.8879100
65	191.8879100
66	190.8879100
67	189.8879100
68	188.8879100
69	187.8879100
70	186.8879100
71	185.8879100
72	184.8879100
73	183.8879100
74	182.8879100
75	181.8879100
76	180.8879100
77	179.8879100
78	178.8879100
79	177.8879100
80	176.8879100
81	175.8879100
82	174.8879100
83	173.8879100
84	172.8879100
85	171.8879100
86	170.8879100
87	169.8879100
88	168.8879100
89	167.8879100
90	166.8879100
91	165.8879100
92	164.8879100
93	163.8879100
94	162.8879100
95	161.8879100
96	160.8879100
97	159.8879100
98	158.8879100
99	157.8879100
100	156.8879100
101	155.8879100
102	154.8879100
103	153.8879100
104	152.8879100
105	151.8879100
106	150.8879100
107	149.8879100
108	148.8879100
109	147.8879100
110	146.8879100
111	145.8879100
112	144.8879100
113	143.8879100
114	142.8879100
115	141.8879100
116	140.8879100
117	139.8879100
118	138.8879100
119	137.8879100
120	136.8879100
121	135.8879100
122	134.8879100
123	133.8879100
124	132.8879100
125	131.8879100
126	130.8879100
127	129.8879100
128	128.8879100
129	127.8879100
130	126.8879100
131	125.8879100
132	124.8879100
133	123.8879100
134	122.8879100
135	121.8879100
136	120.8879100
137	119.8879100
138	118.8879100
139	117.8879100
140	116.8879100
141	115.8879100
142	114.8879100
143	113.8879100
144	112.8879100
145	111.8879100
146	110.8879100
147	109.8879100
148	108.8879100
149	107.8879100
150	106.8879100
151	105.8879100
152	104.8879100
153	103.8879100
154	102.8879100
155	101.8879100
156	100.8879100
157	99.8879100
158	98.8879100
159	97.8879100
160	96.8879100
161	95.8879100
162	94.8879100
163	93.8879100
164	92.8879100
165	91.8879100
166	90.8879100
167	89.8879100
168	88.8879100
169	87.8879100
170	86.8879100
171	85.8879100
172	84.8879100
173	83.8879100
174	82.8879100
175	81.8879100
176	80.8879100
177	79.8879100
178	78.8879100
179	77.8879100
180	76.8879100
181	75.8879100
182	74.8879100
183	73.8879100
184	72.8879100
185	71.8879100
186	70.8879100
187	69.8879100
188	68.8879100
189	67.8879100
190	66.8879100
191	65.8879100
192	64.8879100
193	63.8879100
194	62.8879100
195	61.8879100
196	60.8879100
197	59.8879100
198	58.8879100
199	57.8879100
200	56.8879100
201	55.8879100
202	54.8879100
203	53.8879100
204	52.8879100
205	51.8879100
206	50.8879100
207	49.8879100
208	48.8879100
209	47.8879100
210	46.8879100
211	45.8879100
212	44.8879100
213	43.8879100
214	42.8879100
215	41.8879100
216	40.8879100
217	39.8879100
218	38.8879100
219	37.8879100
220	36.8879100
221	35.8879100
222	34.8879100
223	33.8879100
224	32.8879100
225	31.8879100
226	30.8879100
227	29.8879100
228	28.8879100
229	27.8879100
230	26.8879100
231	25.8879100
232	24.8879100
233	23.8879100
234	22.8879100
235	21.8879100
236	20.8879100
237	19.8879100
238	18.8879100
239	17.8879100
240	16.8879100
241	15.8879100
242	14.8879100
243	13.8879100
244	12.8879100
245	11.8879100
246	10.8879100
247	9.8879100
248	8.8879100
249	7.8879100
250	6.8879100
251	5.8879100
252	4.8879100
253	3.8879100
254	2.8879100
255	1.8879100
256	0.8879100

METRIC DIMENSIONS

DATA LIST #12
SEE FIGURE 12 SHEET 24

REV.	CHANGE NO.	CHK

FIRST USED ON OPTION/MODEL	QTY.	DESCRIPTION	PART NO.	ITEM NO.
VT50	PARTS LIST			

UNLESS OTHERWISE SPECIFIED DIMENSION IN INCHES
TOLERANCES

DECIMALS	ANGLES
.xxx = .005 .xx = .02 .x = .1	±0° 30'

REMOVE BURRS AND BREAK SHARP CORNERS SURFACE QUALITY √

MATERIAL

FINISH

		DATE
DRN.	[illegible]	1-21-75
CHK'D.	[illegible]	
ENG.		
PROJ. ENG.		
PROD.		

NEXT HIGHER ASSY.

SCALE 1/1
SHEET 40 OF 45

digital EQUIPMENT CORPORATION MAYNARD MASSACHUSETTS

TITLE
SHELL VT5Ø

SIZE	CODE	NUMBER	REV.
B	MD	7411540-0-0	A

DIST.

DEC 16-(325)-1040-1A-R373
DRB 100

This drawing and specifications, herein, are the property of Digital Equipment Corporation and shall not be reproduced or copied or used in whole or in part as the basis for the manufacture or sale of items without written permission. COPYRIGHT © 1975
DIGITAL EQUIPMENT CORPORATION

NOTES:
1. ALL DIMENSIONS ARE NOMINAL FOR A FINISH PART, 1/1 SCALE DOES NOT INCLUDE SHRINKAGE FACTOR.

Z	Y
231.4250600	282.4450600
232.2324400	277.4450600
233.0220700	272.4450600
233.0118800	267.4450600
234.5074700	262.4450600
235.3536200	257.4450600
236.1103600	252.4450600
236.8576700	247.4450600
237.5955500	242.4450600
238.3241100	237.4450600
239.0430400	232.4450600
239.7526500	227.4450600
240.4528300	222.4450600
241.1435900	217.4450600
241.8249200	212.4450600
242.4968300	207.4450600
243.1593100	202.4450600
243.8123600	197.4450600
244.4559900	192.4450600
245.0902000	187.4450600
245.7149800	182.4450600
246.3303300	177.4450600
246.9362600	172.4450600
247.5327600	167.4450600
248.1198400	162.4450600
248.6975000	157.4450600
249.2657200	152.4450600
249.8245200	147.4450600
250.3739000	142.4450600
250.9138500	137.4450600
251.4443800	132.4450600
251.9654800	127.4450600
252.4771600	122.4450600
252.9794100	117.4450600
253.4722300	112.4450600
253.9556300	107.4450600
254.4296100	102.4450600
254.8941600	97.4450570
255.3492800	92.4450570
255.7949800	87.4450570
256.2312500	82.4450570
256.6581000	77.4450570
257.0755200	72.4450570
257.4835200	67.4450570
257.8820900	62.4450570
258.2712400	57.4450570
258.6509600	52.4450570
259.0212600	47.4450570
259.3821300	42.4450570
259.7335700	37.4450570
260.0755900	32.4450570
260.4081800	27.4450570
260.7313500	22.4450570
261.0451000	17.4450570
261.3494200	12.4450570
261.6443100	7.4450569
261.9297800	2.4450569

METRIC DIMENSIONS

DATA LIST #13
SEE FIGURE 13 SHEET 25

REV.	CHANGE NO.	DATE
A		

FIRST USED ON OPTION/MODEL	QTY.	DESCRIPTION	PART NO.	ITEM NO.
VT50	PARTS LIST			

UNLESS OTHERWISE SPECIFIED DIMENSION IN INCHES
TOLERANCES
DECIMALS: .xxx = .005, .xx = .02, .x = .1
ANGLES: ±0° 30'
REMOVE BURRS AND BREAK SHARP CORNERS SURFACE QUALITY √

MATERIAL
FINISH

DRN. — DATE 1-21-74
CHK'D. — DATE
ENG. — DATE
PROJ. ENG. — DATE
PROD. — DATE
NEXT HIGHER ASSY.
SCALE 1/1
SHEET 41 OF 45

digital EQUIPMENT CORPORATION MAYNARD MASSACHUSETTS

TITLE: SHELL VT50

SIZE	CODE	NUMBER	REV.
B	MD	7411540-0-0	A

DIST.

DEC-15-(325)-1040-1A-R373
DNB 100

This drawing and specifications, herein, are the property of Digital Equipment Corporation and shall not be reproduced or copied or used in whole or in part as the basis for the manufacture or sale of items without written permission. COPYRIGHT © 1975

DIGITAL EQUIPMENT CORPORATION

REV.	NUMBER	CODE	SIZE
A	7411540-0-0		B

NOTES:
1. ALL DIMENSIONS ARE NOMINAL FOR A FINISH PART, 1:1 SCALE DOES NOT INCLUDE SHRINKAGE FACTOR.

Z	Y
231.8476468	281.7161200
232.0666600	276.7161200
233.4020300	271.7161200
234.1600000	266.7161200
234.9245400	261.7161200
235.6716600	256.7161200
236.4893600	251.7161200
237.1376420	246.7161200
237.8565300	241.7161200
238.5659400	236.7161200
239.2659700	231.7161200
239.9565700	226.7161200
240.6377600	221.7161200
241.3095272	216.7161200
241.9718700	211.7161200
242.6247900	206.7161200
243.2683000	201.7161200
243.9023000	196.7161200
244.5270500	191.7161200
245.1423000	186.7161200
245.7481300	181.7161200
246.3445300	176.7161200
246.9315200	171.7161200
247.5090900	166.7161200
248.0772400	161.7161200
248.6357700	156.7161200
249.1852800	151.7161200
249.7251700	146.7161200
250.2556400	141.7161200
250.7767000	136.7161200
251.2883300	131.7161200
251.7905400	126.7161200
252.2833300	121.7161200
252.7667100	116.7161200
253.2406600	111.7161200
253.7052000	106.7161200
254.1603100	101.7161200
254.6061100	96.7161100
255.0422800	91.7161100
255.4691400	86.7161100
255.8865800	81.7161100
256.2945900	76.7161100
256.6931900	71.7161100
257.0823700	66.7161100
257.4621300	61.7161100
257.8324700	56.7161100
258.1933900	51.7161100
258.5448900	46.7161100
258.8867700	41.7161100
259.2196300	36.7161100
259.5428700	31.7161100
259.8566900	26.7161100
260.1610900	21.7161100
260.4560700	16.7161180
260.7416400	11.7161180
	6.7161179

METRIC DIMENSIONS

DATA LIST #14
SEE FIGURE 14 SHEET 26

FIRST USED ON OPTION/MODEL	QTY.	DESCRIPTION	PART NO.	ITEM NO.
VT50		PARTS LIST		

UNLESS OTHERWISE SPECIFIED DIMENSION IN INCHES
TOLERANCES
DECIMALS: .xxx = .005, .xx = .02, .x = .1
ANGLES: ±0° 30'
REMOVE BURRS AND BREAK SHARP CORNERS SURFACE QUALITY √
MATERIAL
FINISH

DRN.	DATE	1-21-74
CHK'D	DATE	
ENG.	DATE	
PROJ. ENG.	DATE	
PROD.	DATE,	
NEXT HIGHER ASSY.		
SCALE		
SHEET 42 OF 45		

digital EQUIPMENT CORPORATION MAYNARD MASSACHUSETTS

TITLE: SHELL VT50

SIZE	CODE	NUMBER	REV.
B	MD	7411540-0-0	A

DIST.

REVISIONS	REV.	CHANGE NO.	CHK

DEC 16-(325)-1030-1A-R373
DRB 100

12

This drawing and specifications, herein, are the property of Digital Equipment Corporation and shall not be reproduced or copied or used in whole or in part as the basis for the manufacture or sale of items without written permission. COPYRIGHT © 1975
DIGITAL EQUIPMENT CORPORATION

NOTES:
1. ALL DIMENSIONS ARE NOMINAL FOR A FINISH PART, 1:1 SCALE DOES NOT INCLUDE SHRINKAGE FACTOR.

Z	Y
230.5714300	231.9011000
231.3535100	232.9011000
232.1261900	233.9011000
232.8804582	234.9011000
233.6453900	235.9011000
234.3877500	236.9011000
235.1227600	237.9011000
235.8403783	238.9011000
236.5845700	239.9011000
237.2713600	240.9011000
237.9807300	241.9011000
238.6556910	242.9011000
239.3352400	243.9011000
240.0043800	244.9011000
240.6641000	245.9011000
241.3144100	246.9011000
241.9553100	247.9011000
242.5868000	248.9011000
243.2088700	249.9011000
243.8215400	250.9011000
244.4247900	251.9011000
245.0186200	252.9011000
245.6030500	253.9011000
246.1780600	254.9011000
246.7436600	255.9011000
247.2998500	256.9011000
247.8466200	257.9011000
248.3839900	258.9011000
248.9119400	259.9011000
249.4304700	260.9011000
249.9396000	261.9011000
250.4393100	262.9011000
250.9296100	263.9011000
251.4105000	264.9011000
251.8819800	265.9011000
252.3447400	266.9011000
252.7966900	267.9011000
253.2399300	268.9011000
253.6737500	269.9011000
254.0981700	270.9010960
254.5131700	271.9010960
254.9187600	272.9010960
255.3149300	273.9010960
255.7017000	274.9010960
256.0790500	275.9010960
256.4469900	276.9010960
256.8055200	277.9010960
257.1546300	278.9010960
257.4943300	279.9010960
257.8246200	280.9010960
258.1454900	281.9010960
258.4569600	282.9010960
258.7590100	283.9010960
259.0516500	284.9010960
259.3348800	285.9010963
259.6086900	286.9010903
259.8730900	

METRIC DIMENSIONS

DATA LIST #15
SEE FIGURE 15 SHEET 27

FIRST USED ON OPTION/MODEL	QTY.	DESCRIPTION	PART NO.	ITEM NO.
VT50		PARTS LIST		

UNLESS OTHERWISE SPECIFIED DIMENSION IN INCHES
TOLERANCES

DECIMALS	ANGLES
.xxx = .005 .xx = .02 .x = .1	±0° 30'

REMOVE BURRS AND BREAK SHARP CORNERS SURFACE QUALITY √

MATERIAL

FINISH

		DATE
DRN.	D Sullivan	1-20-75
CHK'D.		DATE
ENG.		DATE
PROJ. ENG.		DATE
PROD.		DATE,

NEXT HIGHER ASSY.

SCALE

SHEET 43 OF 45

digital EQUIPMENT CORPORATION MAYNARD MASSACHUSETTS

TITLE: SHELL VT50

SIZE	CODE	NUMBER	REV.
B	MD	7411540-0-0	A

DIST.

REVISIONS: REV. | CHANGE NO. | CHK

DEC 16-(325)-1040-1A-R373
DRB 100

This drawing and specifications, herein, are the property of Digital Equipment Corporation and shall not be reproduced or copied or used in whole or in part as the basis for the manufacture or sale of items without written permission. COPYRIGHT © 1975

DIGITAL EQUIPMENT CORPORATION

NOTES:

1. ALL DIMENSIONS ARE NOMINAL FOR A FINISHED PART, 1:1 SCALE DOES NOT INCLUDE SHRINKAGE FACTOR.

Y	Z
280.0000000	230.0000000
275.0000000	230.7673800
270.0000000	231.5253500
265.0000000	232.2739200
260.0000000	233.0130800
255.0000000	233.7428500
250.0000000	234.4632000
245.0000000	235.1741600
240.0000000	235.8757100
235.0000000	236.5678500
230.0000000	237.2505900
225.0000000	237.9239300
220.0000000	238.5878600
215.0000000	239.2423900
210.0000000	239.8875200
205.0000000	240.5232400
200.0000000	241.1495600
195.0000000	241.7664700
190.0000000	242.3739800
185.0000000	242.9720800
180.0000000	243.5607900
175.0000000	244.1400800
170.0000000	244.7099800
165.0000000	245.2704700
160.0000000	245.8215500
155.0000000	246.3632300
150.0000000	246.8955100
145.0000000	247.4183800
140.0000000	247.9318500
135.0000000	248.4359200
130.0000000	248.9305800
125.0000000	249.4158400
120.0000000	249.8916900
115.0000000	250.3581400
110.0000000	250.8151800
105.0000000	251.2628200
100.0000000	251.7010600
95.0000000	252.1298900
90.0000000	252.5493200
85.0000000	252.9593500
80.0000000	253.3599700
75.0000000	253.7511800
70.0000000	254.1330000
65.0000000	254.5054100
60.0000000	254.8684100
55.0000000	255.2220100
50.0000000	255.5662100
45.0000000	255.9010000
40.0000000	256.2263900
35.0000000	256.5423700
30.0000000	256.8489500
25.0000000	257.1461300
20.0000000	257.4339000
15.0000000	257.7122700
10.0000000	257.9812400
5.0000000	258.2408000
0.0000000	258.4909500

METRIC DIMENSIONS

DATA LIST #16
SEE FIGURE 16 SHEET 28

FIRST USED ON OPTION/MODEL	QTY.	DESCRIPTION	PART NO.	ITEM NO.
VT50		PARTS LIST		

UNLESS OTHERWISE SPECIFIED DIMENSION IN INCHES

TOLERANCES

DECIMALS	ANGLES
.xxx = .005	±0° 30'
.xx = .02	
.x = .1	

REMOVE BURRS AND BREAK SHARP CORNERS SURFACE QUALITY √

MATERIAL

FINISH

		DATE
DRN.	D. Sullivan	1-21-[illegible]
CHK'D.	[illegible]	[illegible]
ENG.	[illegible]	[illegible]
PROJ. ENG.	[illegible]	[illegible]
PROD.	[illegible]	[illegible]

NEXT HIGHER ASSY.

SCALE

SHEET 44 OF 45

digital EQUIPMENT CORPORATION MAYNARD MASSACHUSETTS

TITLE SHELL VT50

SIZE	CODE	NUMBER	REV.
B	MD	7411540-0-0	A

DIST.

REV. | CHANGE NO. | CHK

DLC 16-(325)-1080-1A-R373
DRB 100

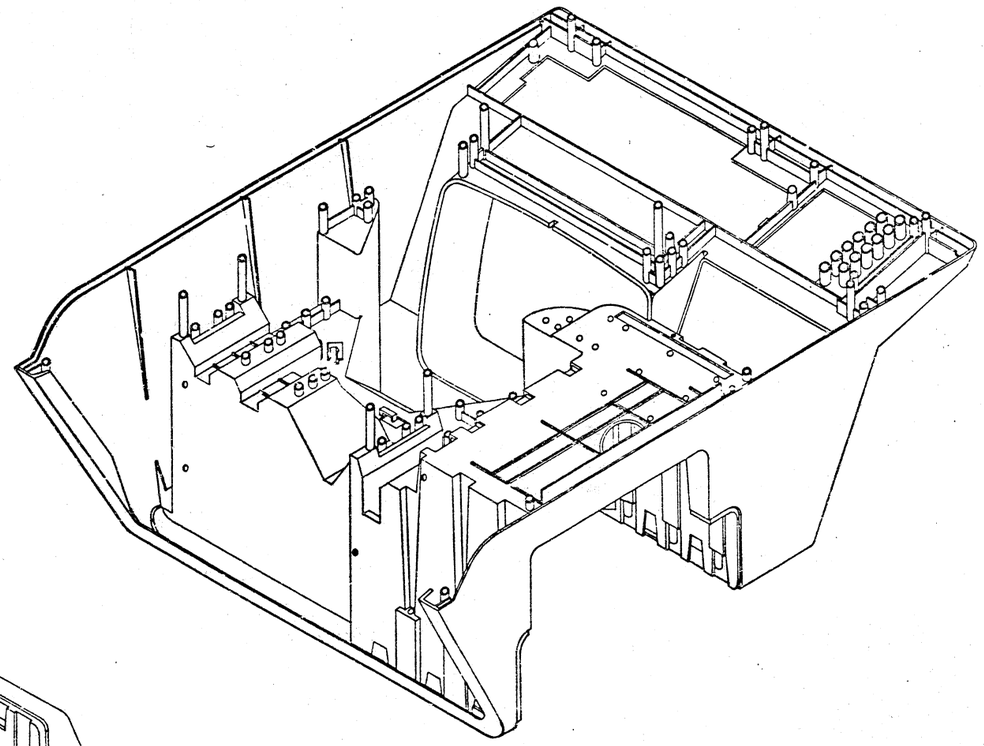

BOTTOM REAR VIEW

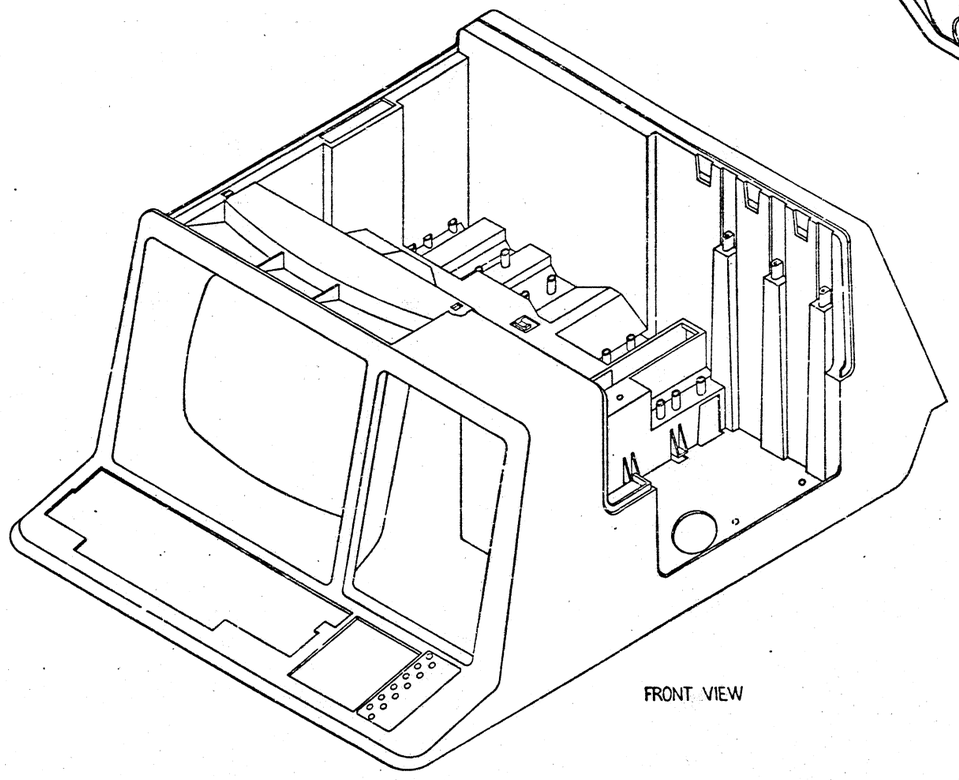

FRONT VIEW

REVISIONS		
CHK	CHANGE NO.	REV.

TITLE	SIZE	CODE	NUMBER	REV.
SHELL VT50	E	WD	7411540-0-0	A
SCALE NONE	SHEET 45 OF 45	DIST.		

1	WD	7411540-0-0	A

This drawing and specifications, herein, are the property of Digital Equipment Corporation and shall not be reproduced or copied or used in whole or in part as the basis for the manufacture or sale of items without written permission.

DIGITAL EQUIPMENT CORPORATION
MAYNARD, MASSACHUSETTS

INCOMING INSPECTION PROCEDURE

DATE 30 JUN 75

TITLE VT50 Shell

REVISIONS

REV	DESCRIPTION	CHG NO	ORIG	DATE	APPD BY	DATE
•	Original Release		C.Hillard C. Hillard	6/30/75 6/30/75	[illegible]	7-1-75

ENG	APPD	SIZE	CODE	NUMBER	REV
[signature]	[signature]	A	II	74-11540-0-0	

DEC 3-(491)-1283-N670

SHEET 1 OF 2

INSPECTION PROCEDURE CONTINUATION SHEET

TITLE VT50 Shell

1.0 Inspection by attributes.

1.1 All other dimensions and/or characteristics pertaining to 7411540 that are not listed must be inspected on 20% of the sample size from each lot. All defects must be listed and inspected on the entire A.Q.L. sample. Parts must conform completely to print.

1.2 Applicable document DEC metals quality manual.

2.0	CHARACTERISTICS	PROCEDURE
2.1	Check location of the front bosses (keyboard)	Use fixture #94-2155-3
2.2	Check location of the front processor board bosses	Use fixture #94-2152-3
2.3	Check location of the rear processor board bosses	Use fixture #94-2156-3
2.4	Size of holes in bosses	Plug gage/vernier cal.
2.5	Mat. thickness	Vernier calipers
2.6	Keyboard opening and location	vernier calipers
2.7	Workmanship	Visually inspect for: 2.7.1 sink in material 2.7.2 flashing/scratches 2.7.3 color and texture 2.7.4 filled holes

	SIZE	CODE	NUMBER	REV
	A	II	7411540-0-0	

DEC 3-(332)-1283-1A-R175

SHEET 2 OF 2

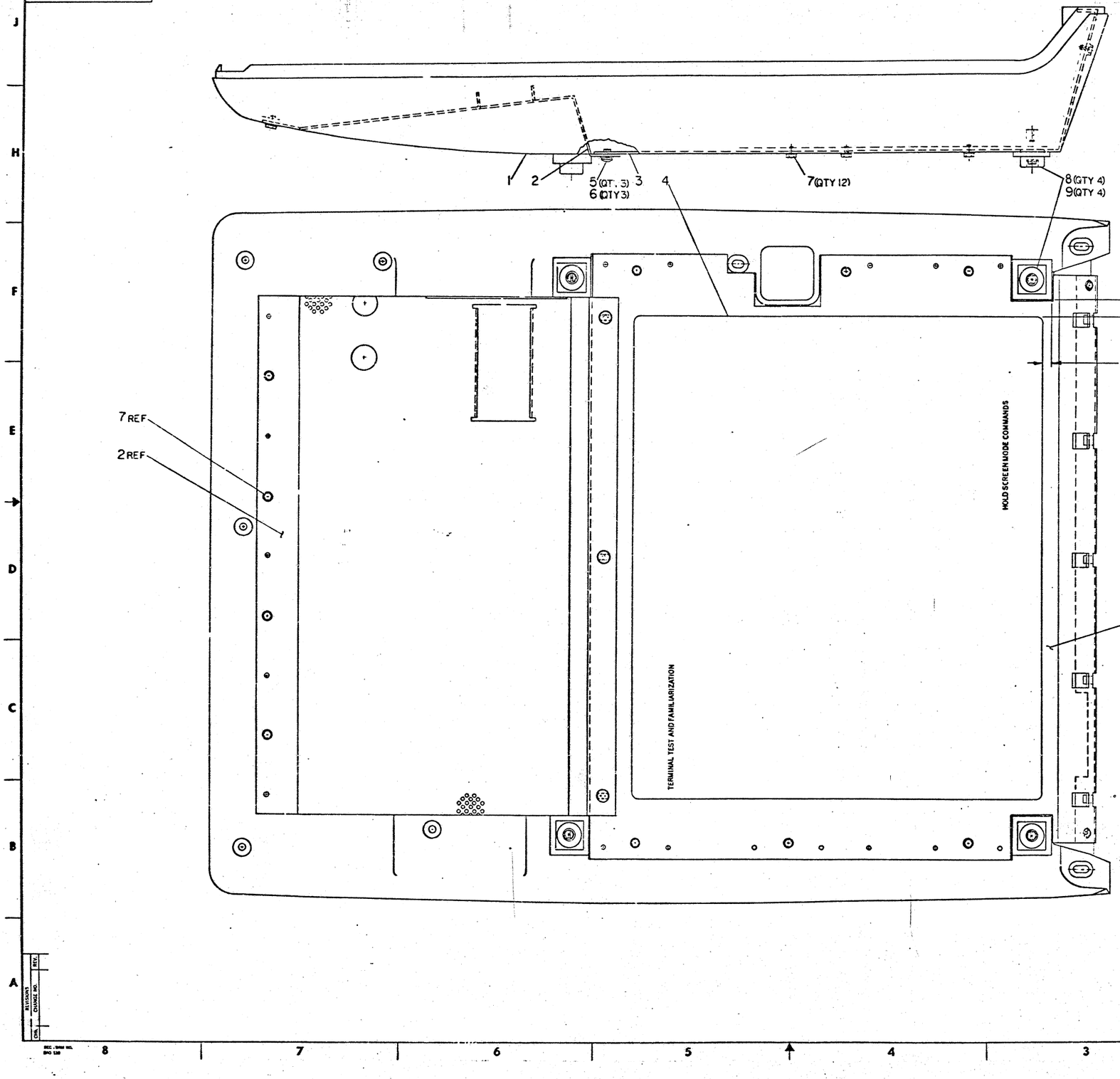

METRIC DIMENSIONS

QTY	DESCRIPTION	PART NO	ITEM
4	SCREW, HEX HD SLOTTED	9007631-01	9
4	BUMPER, RUBBER	9009267	8
12	SCREW, HEX HD.	9009632-00	7
3	WASHER #8 FLAT	9006633	6
3	SCREW, PAN HD, #8-32x.312	9006636-1	5
1	DECAL, BASE	1-1A-7413497-00	4
1	SCREEN, BASE REAR	1-1A-7413323-00	3
1	SCREEN, BASE FRONT	1-MD-7413320-00	2
1	BASE VT50	6-MD-7411539-00	1

UNLESS OTHERWISE SPECIFIED DIMENSIONS ARE IN MILLIMETERS

ANGLES	GENERAL TOLERANCES				
± 30'	ACCURACY	.X	.XX	.XXX	.XXXX
SURFACE QUALITY µm	(CHECK ONE)	± 1	± .5	± .25	± .127
	MEDIUM	±.01	±.02	±.03	±.04
	PRESSFIED	±.1	±.04	±.06	±.13

QUANTITY & VARIATION

THIRD ANGLE PROJECTION

REMOVE BURRS AND BREAK SHARP CORNERS

DO NOT SCALE DWG

MATERIAL SEE PARTS LIST

FINISH

DRN P. Yamauchi 1-28-80 | CHK'D | ENG'R | PROJ ENG | PROG | MFG

FIRST USED ON VT52

TITLE BASE ASSEMBLY

SIZE C | CODE Ø | NUMBER AD-7010998-0-0 | REV

SCALE 1/1 | SHEET 1 OF 1 | DIST

digital

REVISIONS: REV. | CHANGE NO. | DIN.

REC. TRNG NO. 240 128

This drawing and specifications, herein, are the property of Digital Equipment Corporation and shall not be reproduced or copied or used in whole or in part as the basis for the manufacture or sale of items without written permission.

DIGITAL EQUIPMENT CORPORATION
MAYNARD, MASSACHUSETTS

INCOMING INSPECTION PROCEDURE DATE 6/30/75

TITLE VT50 Base

REVISIONS						
REV	DESCRIPTION	CHG NO	ORIG	DATE	APPD BY	DATE
*	Original Release		C.Hillard C.Hillard	6/30		7-7-

ENG	APPD	SIZE	CODE	NUMBER	REV
		A	II	7411539-0-0	

DEC 3-(491)-1283-N670

INSPECTION PROCEDURE CONTINUATION SHEET

TITLE VT50 Base

1.0 Inspection by attributes.

1.1 All other dimensions and/or characteristics pertaining to 7411539 that are not listed must be inspected on 20% of the sample size from each lot. All defects must be listed and inspected on the entire A.Q.L. sample. Parts must conform completely to print.

1.2 Applicable document DEC metals quality manual.

2.0	CHARACTERISTICS	PROCEDURE
2.1	Check location of holes	Use fixture #94-02146-3
2.2	Check holes sizes	Vernier calipers/plug gages
2.3	Material thickness	Vernier calipers
2.4	Workmanship	Visually inspect for:
2.4-1		sink in material
2.4.2		flashing / scratches
2.4.3		color and texture
2.4.4		filled bosses

	SIZE	CODE	NUMBER	REV
	A	II	74 11539-0-0	

DEC 3-(332)-1283-1A-R175

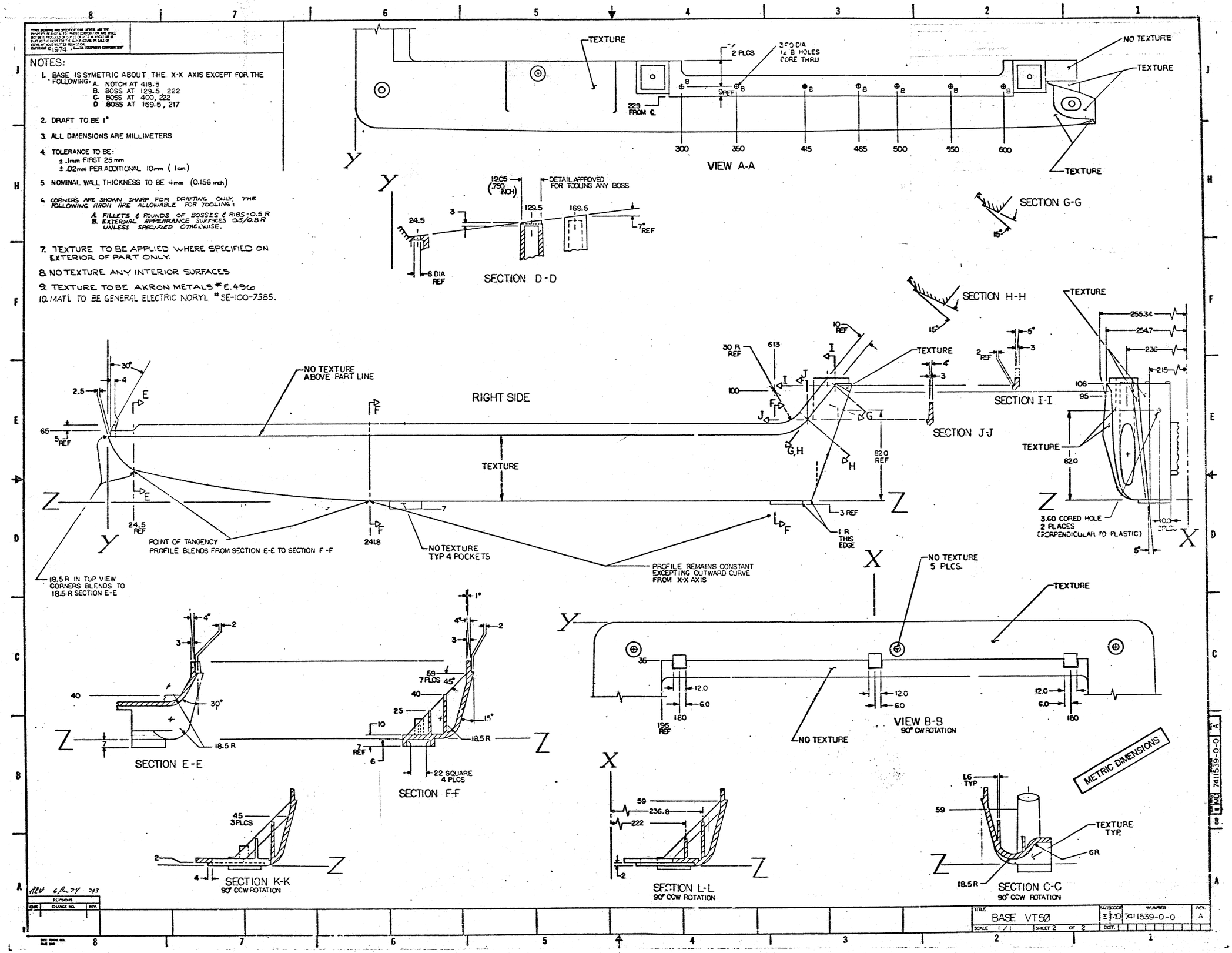
NOTES:
1. BASE IS SYMETRIC ABOUT THE X-X AXIS EXCEPT FOR THE FOLLOWING: A. NOTCH AT 418.5 B. BOSS AT 129.5, 222 C. BOSS AT 400, 222 D. BOSS AT 169.5, 217
2. DRAFT TO BE 1°
3. ALL DIMENSIONS ARE MILLIMETERS
4. TOLERANCE TO BE: ±.1mm FIRST 25 mm ±.02mm PER ADDITIONAL 10mm (1cm)
5. NOMINAL WALL THICKNESS TO BE 4mm (0.156 inch)
6. CORNERS ARE SHOWN SHARP FOR DRAFTING ONLY. THE FOLLOWING RADII ARE ALLOWABLE FOR TOOLING: A. FILLETS & ROUNDS OF BOSSES & RIBS-0.5 R B. EXTERNAL APPEARANCE SURFACES 0.5/0.8 R UNLESS SPECIFIED OTHERWISE.
7. TEXTURE TO BE APPLIED WHERE SPECIFIED ON EXTERIOR OF PART ONLY.
8. NO TEXTURE ANY INTERIOR SURFACES
9. TEXTURE TO BE AKRON METALS #E.496
10. MAT'L TO BE GENERAL ELECTRIC NORYL #SE-100-7385.
VIEW A-A
TEXTURE
NO TEXTURE
2 PLCS
3.60 DIA 12 B HOLES CORE THRU
229 FROM ℄
300
350
415
465
500
550
600
SECTION D-D
DETAIL APPROVED FOR TOOLING ANY BOSS
SECTION G-G
SECTION H-H
RIGHT SIDE
NO TEXTURE ABOVE PART LINE
TEXTURE
POINT OF TANGENCY PROFILE BLENDS FROM SECTION E-E TO SECTION F-F
NO TEXTURE TYP 4 POCKETS
PROFILE REMAINS CONSTANT EXCEPTING OUTWARD CURVE FROM X-X AXIS
18.5 R IN TOP VIEW CORNERS BLENDS TO 18.5 R SECTION E-E
SECTION J-J
SECTION I-I
3.60 CORED HOLE 2 PLACES (PERPENDICULAR TO PLASTIC)
NO TEXTURE 5 PLCS.
VIEW B-B 90° CW ROTATION
NO TEXTURE
SECTION E-E
SECTION F-F
22 SQUARE 4 PLCS
SECTION K-K 90° CCW ROTATION
SECTION L-L 90° CCW ROTATION
SECTION C-C 90° CCW ROTATION
METRIC DIMENSIONS
TEXTURE TYP.
BASE VT50
SCALE 1/1
SHEET 2 OF 2
7411539-0-0
A

"THIS DRAWING AND SPECIFICATIONS, HEREIN, ARE THE PROPERTY OF DIGITAL EQUIPMENT CORPORATION AND SHALL NOT BE REPRODUCED OR COPIED OR USED IN WHOLE OR IN PART AS THE BASIS FOR THE MANUFACTURE OR SALE OF ITEMS WITHOUT WRITTEN PERMISSION.
COPYRIGHT © 1979, DIGITAL EQUIPMENT CORPORATION"

NOTES:
1. MAT'L: .050 THK PERFORATED ALUM. 2.00 DIA. HOLES STAGGERED ON 3.15 CENTERS.
2. BEND ALLOWANCES ARE RELATED TO ℄ LOCATIONS OF HOLE PATTERN.

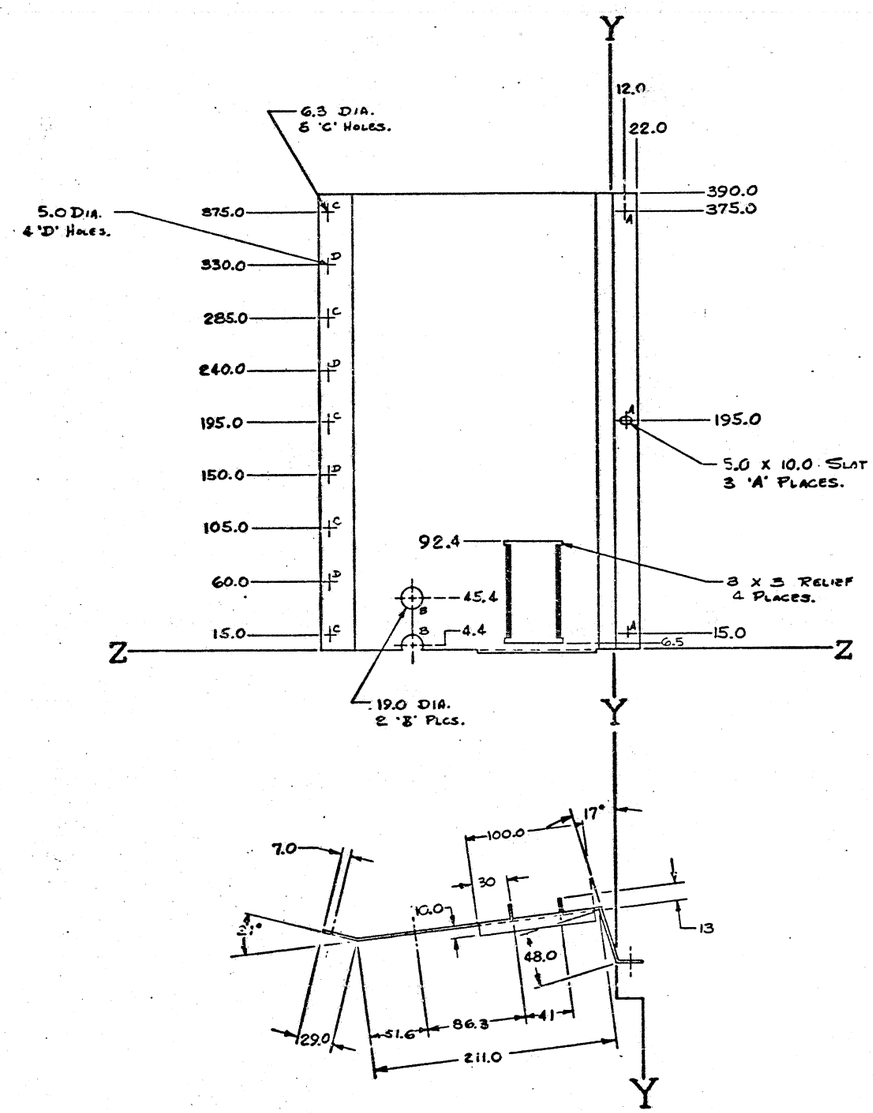

METRIC DIMENSIONS

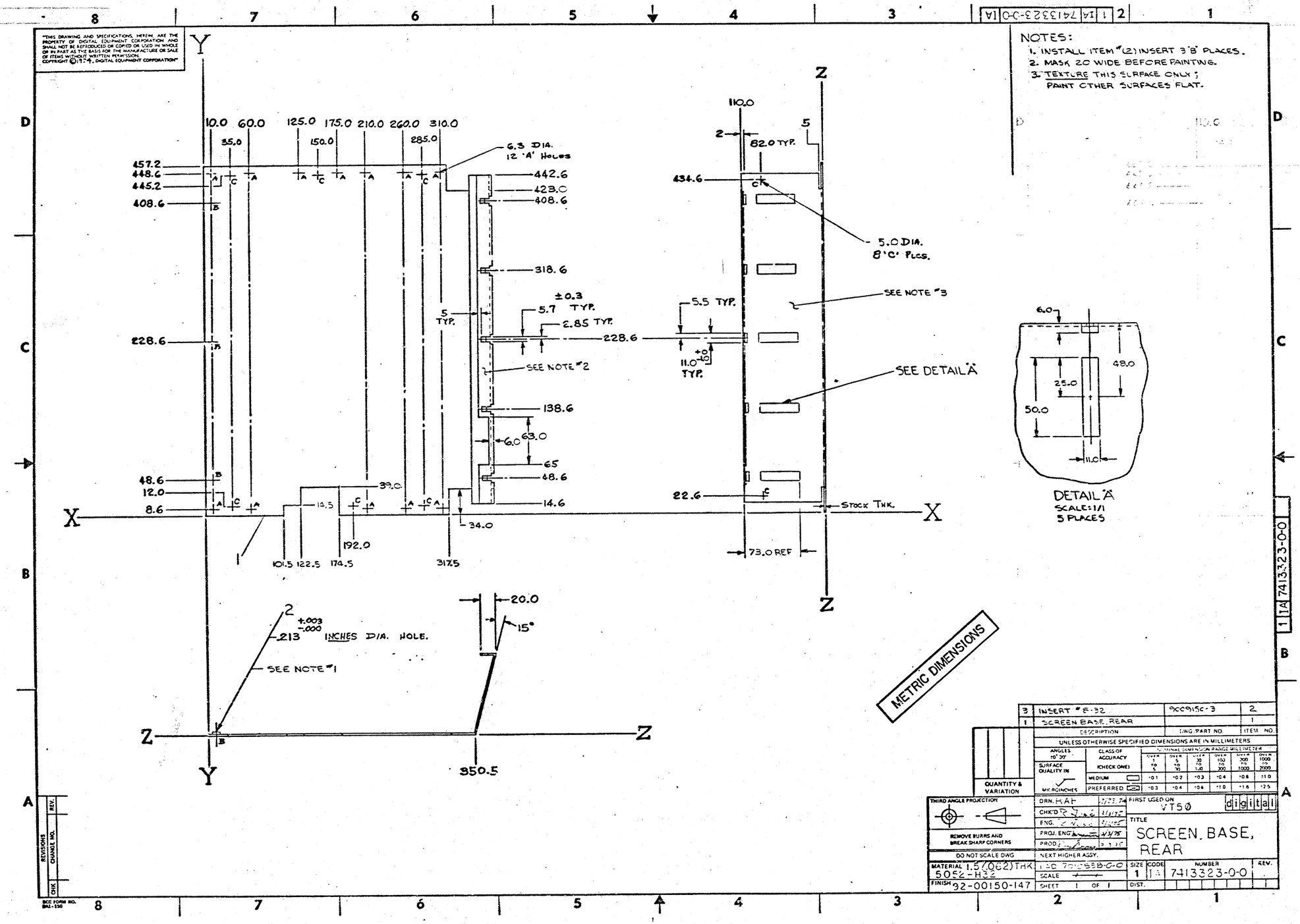

"THIS DRAWING AND SPECIFICATIONS, HEREIN, ARE THE PROPERTY OF DIGITAL EQUIPMENT CORPORATION AND SHALL NOT BE REPRODUCED OR COPIED OR USED IN WHOLE OR IN PART AS THE BASIS FOR THE MANUFACTURE OR SALE OF ITEMS WITHOUT WRITTEN PERMISSION. COPYRIGHT © 1974, DIGITAL EQUIPMENT CORPORATION"
NOTES:
1. INSTALL ITEM #(2) INSERT 3 'B' PLACES.
2. MASK 20 WIDE BEFORE PAINTING.
3. TEXTURE THIS SURFACE ONLY; PAINT OTHER SURFACES FLAT.
6.3 DIA. 12 'A' HOLES
5.0 DIA. 8 'C' PLCS.
SEE NOTE #3
SEE NOTE #2
SEE DETAIL 'A'
STOCK THK.
73.0 REF
DETAIL 'A'
SCALE: 1/1
5 PLACES
.213 +.003 -.000 INCHES DIA. HOLE.
SEE NOTE #1
METRIC DIMENSIONS
3 INSERT #8-32 9C0915C-3 2
1 SCREEN BASE, REAR 1
DESCRIPTION DWG. PART NO. ITEM NO.
UNLESS OTHERWISE SPECIFIED DIMENSIONS ARE IN MILLIMETERS
ANGLES ±0° 30'
SURFACE QUALITY IN MICROINCHES
CLASS OF ACCURACY (CHECK ONE)
MEDIUM
PREFERRED
QUANTITY & VARIATION
THIRD ANGLE PROJECTION
REMOVE BURRS AND BREAK SHARP CORNERS
DO NOT SCALE DWG
MATERIAL 1.5 (.062) THK 5052-H32
FINISH 92-00150-147
DRN. RAF
CHK'D
ENG.
PROJ. ENG.
PROD.
NEXT HIGHER ASSY.
SCALE
SHEET 1 OF 1
FIRST USED ON VT50
digital
TITLE SCREEN, BASE, REAR
SIZE 1 CODE IA NUMBER 7413323-0-0 REV.
DIST.
REVISIONS
CHANGE NO.
REV.
CHK
BCC FORM NO. BA1-150

"THIS DRAWING AND SPECIFICATIONS, HEREIN, ARE THE PROPERTY OF DIGITAL EQUIPMENT CORPORATION AND SHALL NOT BE REPRODUCED OR COPIED OR USED IN WHOLE OR IN PART AS THE BASIS FOR THE MANUFACTURE OR SALE OF ITEMS WITHOUT WRITTEN PERMISSION.
COPYRIGHT © 1975, DIGITAL EQUIPMENT CORPORATION"

NOTES:
1-MATERIAL: FASSON CRACK-N-PEEL (VARIETY UNPERFORATED BACKING)
COLOR: PRINT, DIAGRAMS, BORDERS: DEC GRAY 9200001-47
BACKGROUND: DEC GRAY 9200000-68.
VENDOR: COMMONWEALTH PUBLISHING

369 REF

307 REF

TERMINAL TEST AND FAMILIARIZATION

Notes

DESCRIPTION OF S1 AND S2

VT50FEATURES

CONTROL CODES

ESCAPE SEQUENCES

HOLD SCREEN MODE COMMANDS

METRIC DIMENSIONS

ITEM NO.	QTY	DESCRIPTION	DWG./PART NO.
2	1	DECAL, (ART WORK)	C-DC-7413497-0-1
1	1	DECAL, BASE	

UNLESS OTHERWISE SPECIFIED DIMENSIONS ARE IN MILLIMETERS

ANGLES ±0° 30'	CLASS OF ACCURACY (CHECK ONE)	NOMINAL DIMENSION RANGE MILLIMETER OVER 1 TO 6	OVER 6 TO 30	OVER 30 TO 120	OVER 120 TO 300	OVER 300 TO 1000	OVER 1000 TO 2000
SURFACE QUALITY IN MICROINCHES	MEDIUM ☐	±0.1	±0.2	±0.3	±0.4	±0.6	±1.0
	PREFERRED ☐	±0.3	±0.4	±0.6	±1.0	±1.6	±2.5

QUANTITY & VARIATION

THIRD ANGLE PROJECTION

REMOVE BURRS AND BREAK SHARP CORNERS

DO NOT SCALE DWG

MATERIAL SEE NOTE #1

FINISH —11—

DRN. P. [illegible] 1-27-75
CHK'D. [illegible] 1-27-75
ENG. [illegible] 1-27-75
PROJ. ENG. [illegible]
PROD. [illegible]

FIRST USED ON VT52

digital

TITLE DECAL, BASE

NEXT HIGHER ASSY. 2-UA-VT50-0-0

SIZE 1 CODE 1A NUMBER 7413497-0-0 REV.

SCALE 1/1

SHEET 1 OF 1 DIST.

REVISIONS | CHANGE NO. | REV. | CHK

DEC FORM NO. BAE-350

1 1A 7413497-0-0

| | | |

THIS DRAWING AND SPECIFICATIONS, AS AN UNPUBLISHED WORK, IS THE PROPERTY OF DIGITAL EQUIPMENT CORPORATION AND SHALL NOT BE REPRODUCED OR COPIED OR USED IN WHOLE OR IN PART AS THE BASIS OF THE MANUFACTURE OR SALE OF ITEMS WITHOUT WRITTEN PERMISSION.
COPYRIGHT © 1975, DIGITAL EQUIPMENT CORPORATION

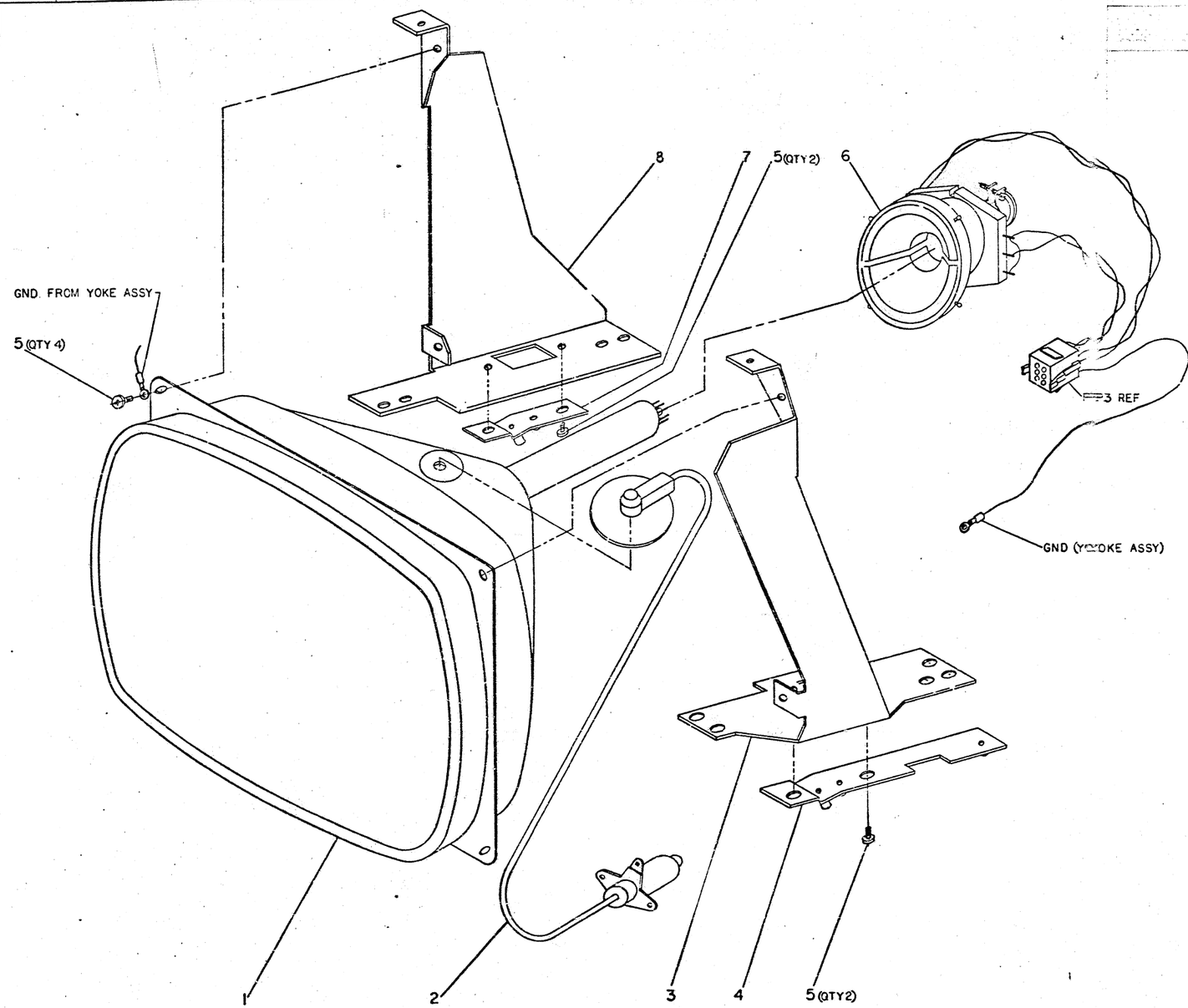

METRIC DIMENSIONS

ITEM	QTY	DESCRIPTION	DWG PART NO
8	1	BRACKET, CRT LEFT	1-IA-7413321-00
7	1	BRKT, PC BD TO CRT BRKT LEFT	2-IA-7413324-00
6	1	YOKE ASSEMBLY	2 IA-7010505-00
5	8	SCREW, PNL, PAN HD 8-32×.37	9006636-1
4	1	BRKT, PC BD TO CRT BRKT RT	2-IA-7413325-00
3	1	BRACKET, CRT RIGHT	1-IA-7413327-00
2	1	CONN, HIGH VOLTAGE	
1	1	CATHODE RAY TUBE	12119-01

UNLESS OTHERWISE SPECIFIED DIMENSIONS ARE IN MILLIMETERS

APPLIES TO	CLASS OF ACCURACY	NOMINAL MINUS (MILLIMETER)					
		0.5	3	30	120	315	1000
SURFACE QUALITY (R)	MEDIUM	-01	-02	-03	-04	-05	-06
	PREFERRED	-02	-04	-06	-08	-10	-12

QUANTITY & VARIATION

THIRD ANGLE PROJECTION

REMOVE BURRS AND BREAK SHARP CORNERS

DO NOT SCALE DWG

DRN [illegible] 6-2-75
CHK'D
ENG'G APPR
PROD

NEXT ASSY

FIRST USED ON VT50

TITLE: CRT ASSEMBLY

MATERIAL: SEE PARTS LIST
FINISH

SIZE: D | CODE: AD | NUMBER: 70108590-0-0 | REV:

SCALE

SHEET 1 OF 1 | DIST

REVISION RECORD

ZAT	DWG NO
	70108590-00
A	

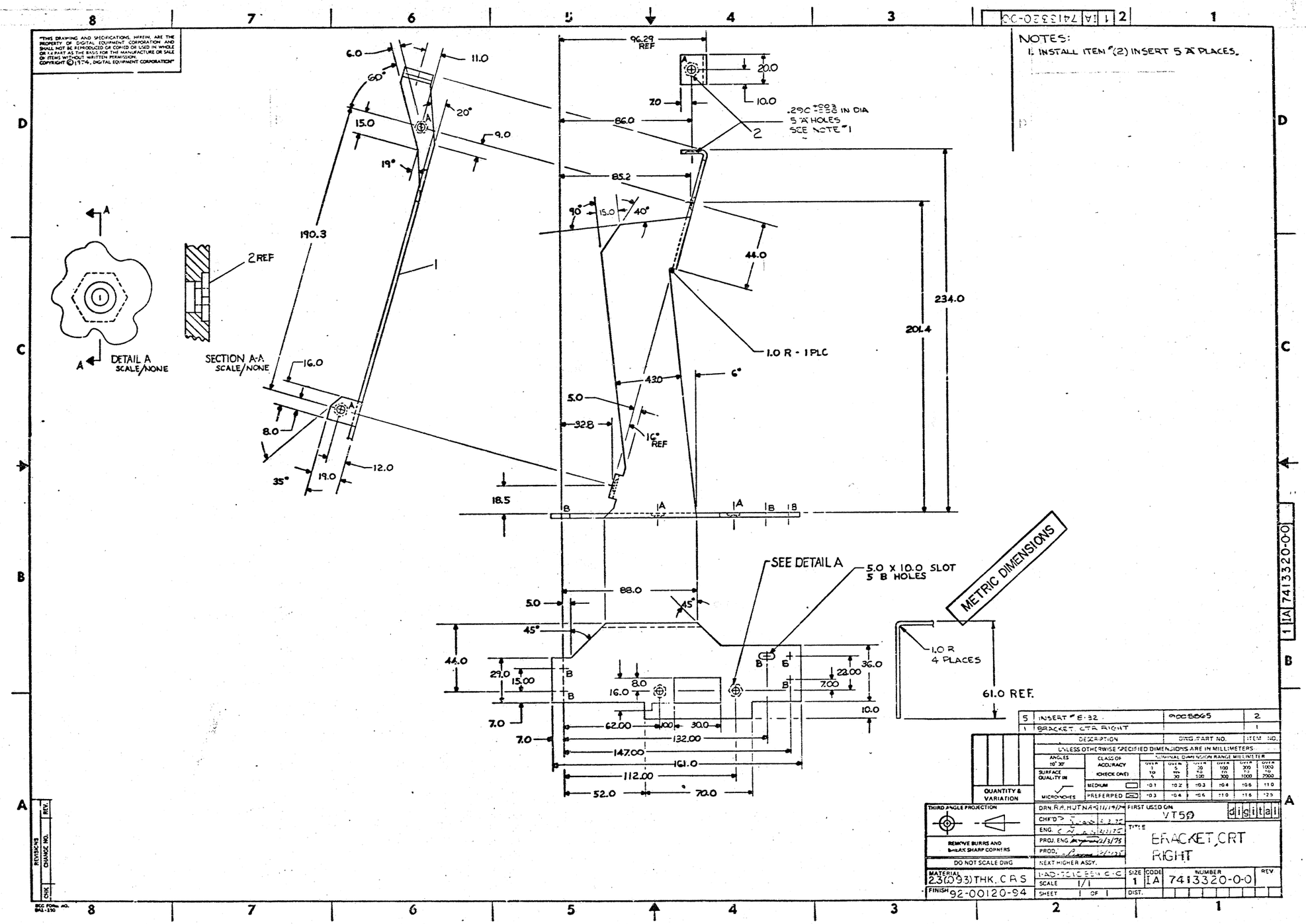

"THIS DRAWING AND SPECIFICATIONS, HEREIN, ARE THE PROPERTY OF DIGITAL EQUIPMENT CORPORATION AND SHALL NOT BE REPRODUCED OR COPIED OR USED IN WHOLE OR IN PART AS THE BASIS FOR THE MANUFACTURE OR SALE OF ITEMS WITHOUT WRITTEN PERMISSION. COPYRIGHT © 1974, DIGITAL EQUIPMENT CORPORATION"

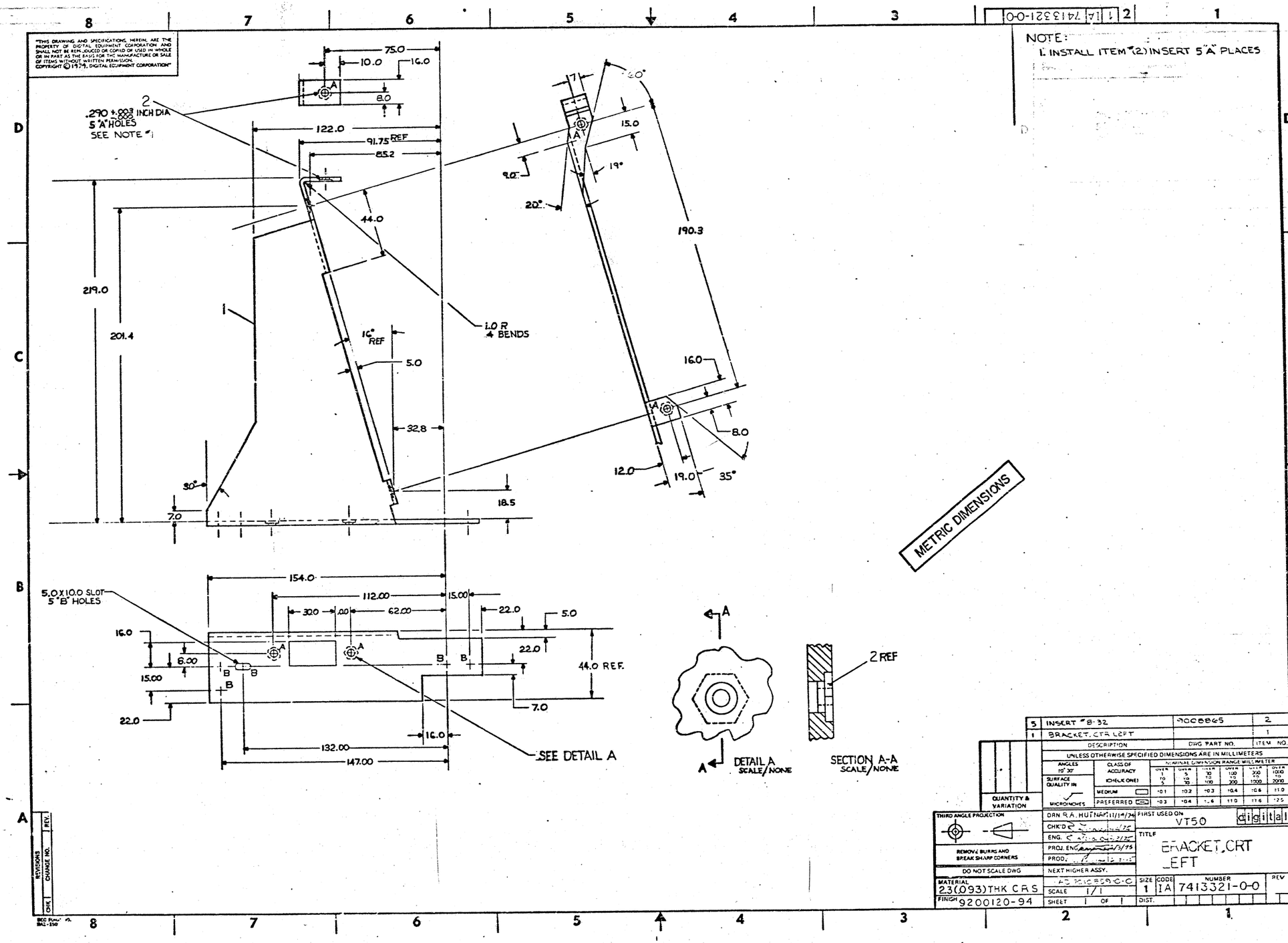

"THIS DRAWING AND SPECIFICATIONS, HEREIN, ARE THE PROPERTY OF DIGITAL EQUIPMENT CORPORATION AND SHALL NOT BE REPRODUCED OR COPIED OR USED IN WHOLE OR IN PART AS THE BASIS FOR THE MANUFACTURE OR SALE OF ITEMS WITHOUT WRITTEN PERMISSION. COPYRIGHT © 1979, DIGITAL EQUIPMENT CORPORATION"
NOTE:
1. INSTALL ITEM #(2) INSERT 5 "A" PLACES
METRIC DIMENSIONS
.290 +.003 -.000 INCH DIA
5 "A" HOLES
SEE NOTE #1
1.0 R
4 BENDS
5.0 X 10.0 SLOT
5 "B" HOLES
SEE DETAIL A
DETAIL A
SCALE/NONE
SECTION A-A
SCALE/NONE
2 REF
5 INSERT #B-32 9008865 2
1 BRACKET, CTR LEFT 1
DESCRIPTION DWG PART NO. ITEM NO.
UNLESS OTHERWISE SPECIFIED DIMENSIONS ARE IN MILLIMETERS
ANGLES ±0° 30'
CLASS OF ACCURACY (CHECK ONE)
SURFACE QUALITY IN MICROINCHES
MEDIUM
PREFERRED
QUANTITY & VARIATION
THIRD ANGLE PROJECTION
REMOVE BURRS AND BREAK SHARP CORNERS
DO NOT SCALE DWG
DRN R.A. HUTNAN 11/14/74
CHK'D
ENG.
PROJ. ENG
PROD.
NEXT HIGHER ASSY.
FIRST USED ON VT50
digital
TITLE BRACKET, CRT LEFT
MATERIAL 23(.093) THK CRS
FINISH 9200120-94
SCALE 1/1
SHEET 1 OF 1
SIZE 1
CODE IA
NUMBER 7413321-0-0
REV
DIST.
REVISIONS
CHK
CHANGE NO.
REV.

digital EQUIPMENT CORPORATION MAYNARD MASSACHUSETTS

PURCHASE SPECIFICATIONS

This disclosure contains confidential proprietary information of Digital. This information shall not be disclosed to persons outside the employ of Digital, except by Digital personnel so authorized by Digital, and only for use by such other persons in the design, production or manufacture of products for Digital.

TITLE: YOKE DEFLECTION

1. GENERAL DESCRIPTION:
   Deflection Yoke with an inductance of 107 μH $\pm$ 5% horizontal coils connected in parallel, an inductance of 29.9 mH $\pm$ 10% vertical coils connected in series.

2. APPLICABLE DOCUMENTS: (Latest revision on date of order).
   U.L. FR--1 Fire Retardant

3. REQUIREMENTS:

3.1 Mechanical:

3.1.1 Dimensions: Reference Per Figure 1A and 1B

3.1.2 Yoke Lock: A screw tightened clamping ring shall be provided which allows the yoke to be locked both axially and radially in the desired position.

3.1.3 Workmanship: All units shall be manufactured in a careful and workmanship like manner in accordance with good design and sound practice. All units will be processed in such a manner that they are uniform in quality and free from cracks and voids in the case and other defects that will affect the life and proper functioning or appearance.

3.2 Electrical:

3.2.1 Schematic: Reference Per Figure 2

3.2.2 Test Procedures: Reference Per Figure 3

3.2.3 Deflection Angle: 110 degrees nominal.

3.2.4 Horizontal Coils:

A) Connection: Shall be in parallel

B) Inductance: 107 μH $\pm$ 5%

C) Resistance: 0.2 Ω $\pm$ 10%

D) Sensitivity: 8.4 A/230mm (with 11K anode potential).

E) Terminal Connections: 4, 6, and 5 ct or Flying Leads

APPROVED VENDOR — First Used On:

Per Qualified Vendor Listing — VT50

Unless Otherwise Specified.
Dimensions are in inches, tolerances are three decimals $\pm$ .005, two place decimals $\pm$ .02, one place decimal $\pm$ .1; Angles $\pm$ 0° 30'.

REVISION AUTHORIZATION			APPROVAL AND DATE		SIZE	CODE	NUMBER	REV
SIGNATURE	REV	DATE	Design Eng. R. Pucci	Chief Eng.	A	PS	1611900-0-0	
			Project Engr. Ted DeLorenzo	Comp. Engr. M. Chetry	PAGE 1		OF 9	

DEC 8-(491)-1049-N173

digital EQUIPMENT CORPORATION MAYNARD MASSACHUSETTS — CONTINUATION SHEET — PURCHASE SPECIFICATIONS

3.2 Electrical: (continued)

3.2.4 Vertical Coils:

A) Connection: Shall be in series

B) Inductance: 29.9mH $\pm$ 10%

C) Resistance: 16.4 Ω $\pm$ 10%

D) Sensitivity: 504mA/175mm (with 11K anode potential)

E) Terminal Connections: 1 and 3 center tap 2 or Flying Leads

3.2.5 Beam Centering Magnets (shall be provided which will have the following characteristics:

A) Null Effective Field: With the beam centering magnets adjusted to null their effective field, there will be no deflection of the beam greater than 3mm measured at the center of a 90 degree 12 inch CRT faceplate, when the entire magnet assembly is rotated.

NOTE: There will be no yoke current flowing during this test.

B) Maximum Effective Field: With the beam centering magnets adjusted for maximum effective field, there will be at least 20mm deflection of the beam as measured at the center of a 90 degree 12 inch C.R.T. faceplate when the entire magnet assembly is rotated.

NOTE: There will be no yoke current flowing during this test.

3.2.6 Cross Talk: Maximum allowable cross talk 1/15 of the applied voltage @500 HZ or 1/200th @ 15,750 HZ

3.2.7 Deflection Centers: Horizontal deflection center shall be well within the conical part of the C.P.T. and Vertical & Horizontal deflection centers shall coincide.

3.2.8 Distortion: Reference Per Figure 4

3.2.9 High Voltage Breakdown: 500 Volts peak-peak min. Winding to Winding & Winding to Core.
NOTE: All beam centering and distortion measurements shall be made with, an 11K anode potential.

3.3 Solderability: All contacts will be tinned and ready for soldering as received with no further preparation required. They will be capable of providing well wetted solder joints when mated with an #18 AWG stranded tinned copper wire lead. Standard Hand Soldering techniques will be employed using a Weller W--TCP iron equipped with a PTE7 solder tip, at a soldering temperature of 700°F an Alpha DX4815F rosin core solder with a QQ-S-571 Flux shall be the materials used to solder the leads to the component.

SIZE	CODE	NUMBER	REV
A	PS	1611900-0-0	
PAGE 2		OF 9	

DEC 8-(491)-1049-N173

digital EQUIPMENT CORPORATION MAYNARD MASSACHUSETTS — CONTINUATION SHEET — PURCHASE SPECIFICATIONS

3.4 Environmental:

3.4.1 Temperature:

A) Operating: +10°C to +70°C

B) Storage: -10°C to +80°C

3.4.2 Humidity: 20% to 80% over a temperature -10°C to +80°C without condensation.

3.4.3 Shock (non-operating): 50G shock pulse duration 30 $\pm$ 10m seconds in 6 orientation with 1/2 sine pulse.

3.4.4 Vibration:

A) Operating: .002" Double Amplitude from 8 to 50HZ, 0.256 Double Amplitude from 40 to 500HZ with one octave per minute duration.

B) Non-Operating: Vertical; 1.895 RMS overall from 10-300HZ. Acceleration Spectral Density; $0.029G^2$ HZ from 10 to 50 HZ, with approximately db/octave roll off from 50-200HZ.

3.5 Marking: Vendor name or symbol, DEC identifying number 1611900-00 and leads marked.

NOTE: Markings shall be impervious to a Trichlorethylene bath for 5 seconds of contact when applied with a cleaning brush.

3.6 Shelf Life: There shall be no degradation from initial measurements, when stored for 1 year at RH of 20% to 80% over a temperature range of -10°C to +80°C.

3.7 Packaging: Shall be enclosed in a non-corrosive container to the component and meet I.C.C. requirements for shipment by rail, airplane and truck.

NOTE:
All Flying leads shall be 18 inches long, #22 stranded hookup wire with U.L. approved (FR-1) PVC Insulation. Leads shall be stripped and tinned 5/8" from the end. Vertical Leads shall be Yellow and Green, Horizontal Leads shall be Red and Blue.

SIZE	CODE	NUMBER	REV
A	PS	1611900-0-0	
PAGE 3		OF 9	

DEC 8-(491)-1049-N173

digital EQUIPMENT CORPORATION MAYNARD MASSACHUSETTS — CONTINUATION SHEET — PURCHASE SPECIFICATIONS

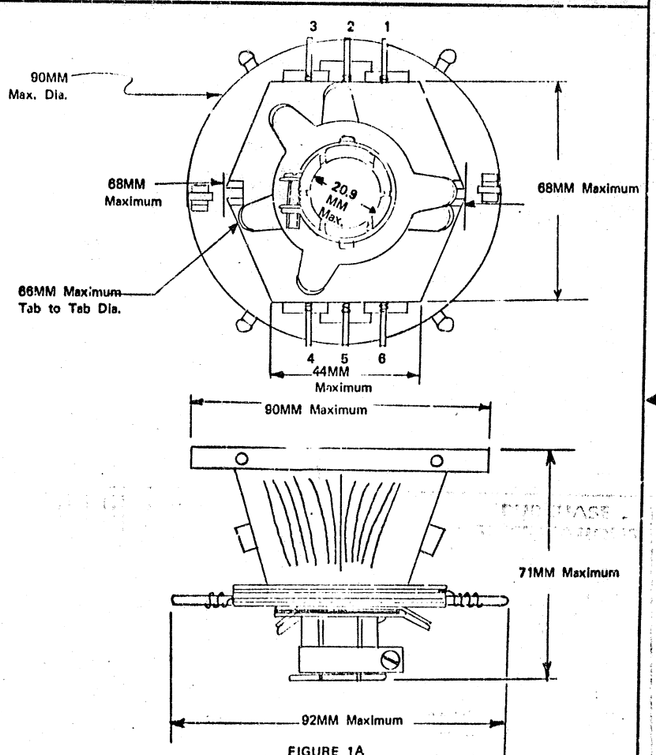

FIGURE 1A
MECHANICAL CONFIGURATION

SIZE	CODE	NUMBER	REV
A	PS	1611900-0-0	
PAGE 4		OF 9	

DEC 8-(491)-1049-N173

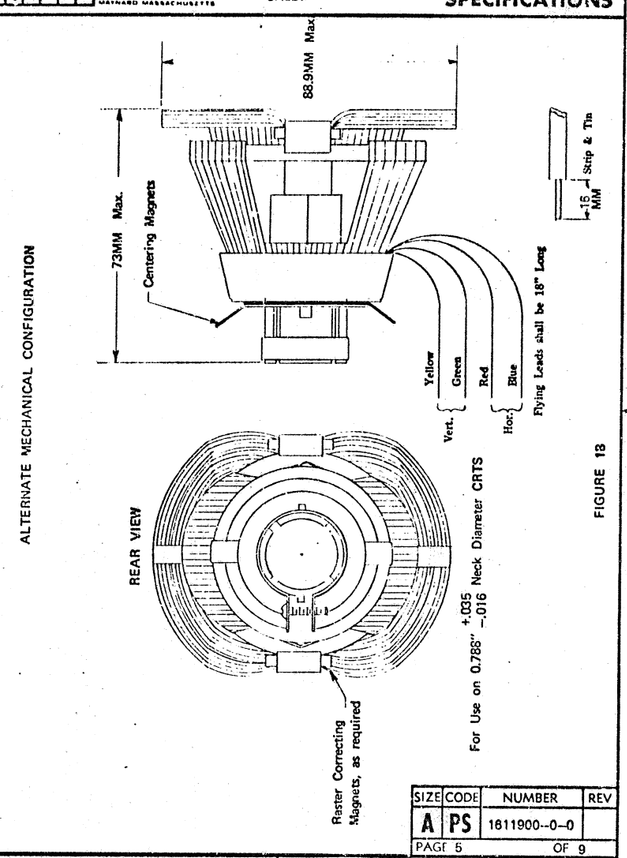

ALTERNATE MECHANICAL CONFIGURATION

FIGURE 1B

SIZE	CODE	NUMBER	REV
A	PS	1611900--0--0	

PAGE 5 OF 9

DEC 8-(491)-1049-N173

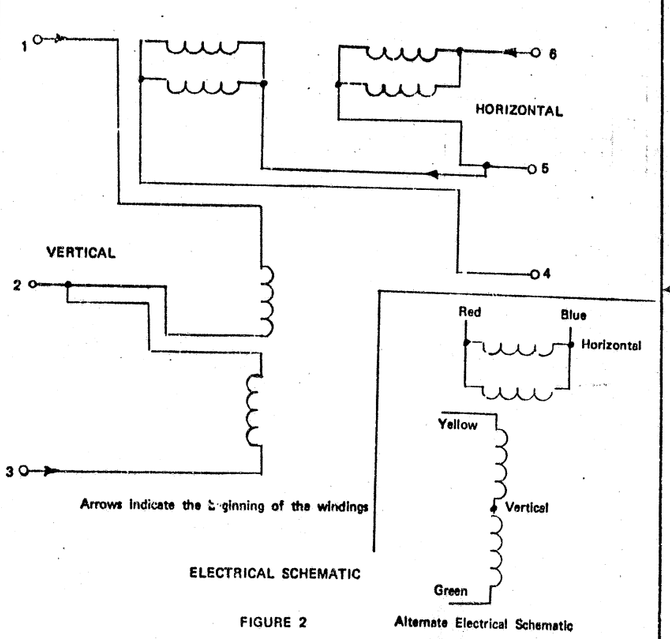

FIGURE 2

SIZE	CODE	NUMBER	REV
A	PS	1611900--0--0	

PAGE 6 OF 9

DEC 8-(491)-1049-N173

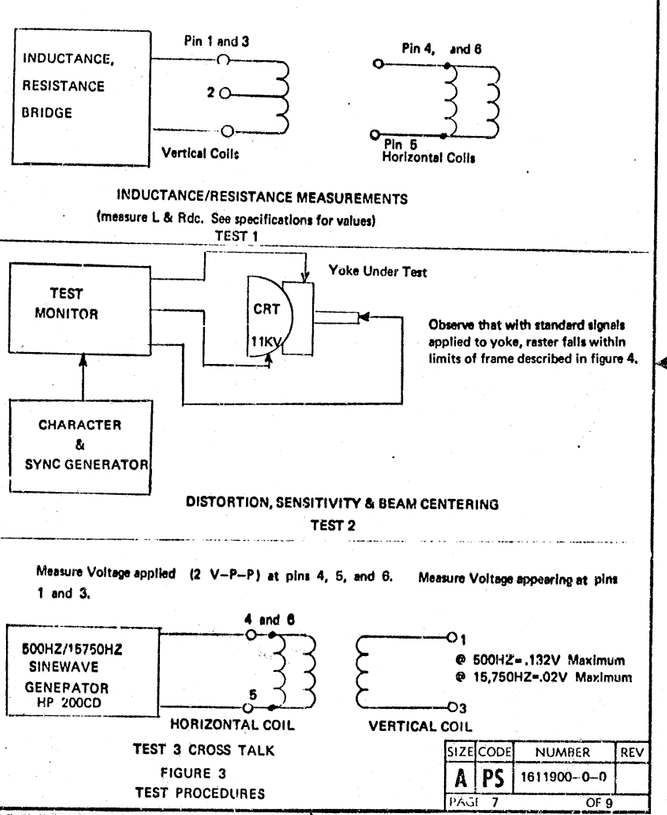

TEST 3 CROSS TALK

FIGURE 3

TEST PROCEDURES

SIZE	CODE	NUMBER	REV
A	PS	1611900--0--0	

PAGE 7 OF 9

DEC 8-(491)-1049-N173

TEST 4: Deflection Range of Centering Magnets:

A) Two Yokes are required to perform this test. The Yoke under test is placed on the neck of the test monitor C.R.T. The second Yoke is not mounted on the C.R.T. but is wired into the monitor circuitry in the usual manner.

B) Adjust the centering magnets on the C.R.T. mounted Yoke for minimum deflection of the spot.

C) Rotate the entire magnet assembly and note the deflection limits of the spot.

D) Adjust the centering magnets for maximum deflection of the spot.

E) Rotate the assembly and note the deflection limits of the spot.

NOTE! (caution) all the above adjustments will be made with the brightness control set so that the spot is just barely visible to prevent burning the C.R.T. Phosphors.

TEST 5: Distortion:

A. Place the yoke in an operable VT50 Monitor.

B. With height and width controls set ot produce a raster 230mm wide by 175mm high, all distortion shall fall within the 3mm wide frame as shown in Figure 4.

SIZE	CODE	NUMBER	REV
A	PS	1611900--0--0	

PAGE 8 OF 9

DEC 8-(491)-1049-N173

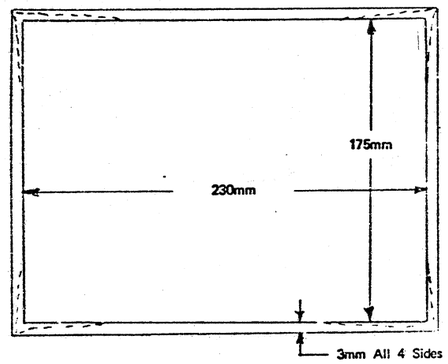

With a raster dimension of 230 x 175mm all distortion will fall within a 3mm wide band on each edge of the raster.

FIGURE 4
DISTORTION

"THIS DRAWING AND SPECIFICATIONS, HEREIN, ARE THE PROPERTY OF DIGITAL EQUIPMENT CORPORATION AND SHALL NOT BE REPRODUCED OR COPIED OR USED IN WHOLE OR IN PART AS THE BASIS FOR THE MANUFACTURE OR SALE OF ITEMS WITHOUT WRITTEN PERMISSION.
COPYRIGHT © 1975, DIGITAL EQUIPMENT CORPORATION"

LEGEND	
NUMBER	VARIATION
7010847-1-0	USE WITH COPIER
7010847-2-0	USE WITH-OUT COPIER

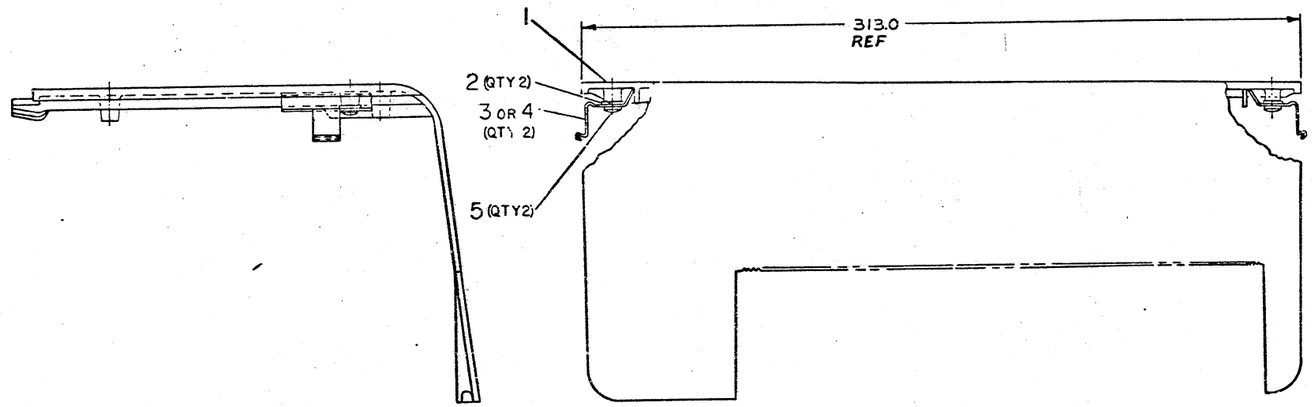

METRIC DIMENSIONS

QUANTITY & VARIATION		DESCRIPTION	DWG. PART NO.	ITEM NO.
2	2	SCREW, PAN HD, #8-32×.25	9009224-1	5
2	-	BRACKET, COPIER COVER	1-MD-7413329-0-0	4
-	2	BRACKET, COPIER COVER	1-MD-7413330-0-0	3
2	2	WASHER, FLAT	9006662	2
1	1	COPIER COVER	E-MD-7412574-0-0	1

7010847-2-0 / 7010847-1-0

UNLESS OTHERWISE SPECIFIED DIMENSIONS ARE IN MILLIMETERS

ANGLES ±0° 30'

SURFACE QUALITY IN MICROINCHES

CLASS OF ACCURACY (CHECK ONE)

NOMINAL DIMENSION RANGE MILLIMETER

	OVER 1 TO 5	OVER 5 TO 30	OVER 30 TO 100	OVER 100 TO 300	OVER 300 TO 1000	OVER 1000 TO 2000
MEDIUM	±0.1	±0.2	±0.3	±0.4	±0.6	±1.0
PREFERRED	±0.3	±0.4	±0.6	±1.0	±1.6	±2.5

THIRD ANGLE PROJECTION

REMOVE BURRS AND BREAK SHARP CORNERS

DO NOT SCALE DWG

MATERIAL: SEE PARTS LIST

FINISH

DRN. P. Appalianco 1-24-75

CHK'D

ENG.

PROJ. ENG.

PROD.

NEXT HIGHER ASSY. Ø-UA-VT5Ø-0-0

SCALE 1/1

SHEET 1 OF 1

FIRST USED ON VT5Ø

digital

TITLE COPIER COVER ASSEMBLY

SIZE 1 | CODE AD | NUMBER 7010847-0-0 | REV.

DIST.

REVISIONS | CHANGE NO. | REV.

1 AD 7010847-0-0

BEC FORM NO. DA1-350

THIS DRAWING AND SPECIFICATIONS, HEREIN, ARE THE PROPERTY OF DIGITAL EQUIPMENT CORPORATION AND SHALL NOT BE REPRODUCED OR COPIED OR USED IN WHOLE OR IN PART AS THE BASIS FOR THE MANUFACTURE OR SALE OF ITEMS WITHOUT WRITTEN PERMISSION.
COPYRIGHT © 1978, DIGITAL EQUIPMENT CORPORATION

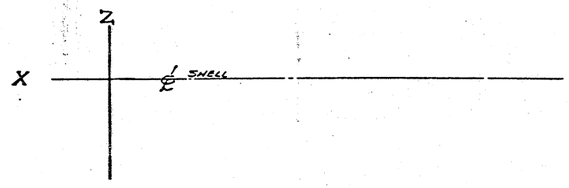

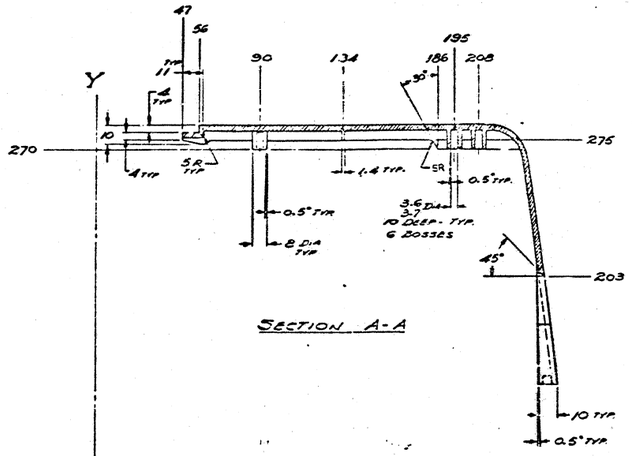

SECTION A-A

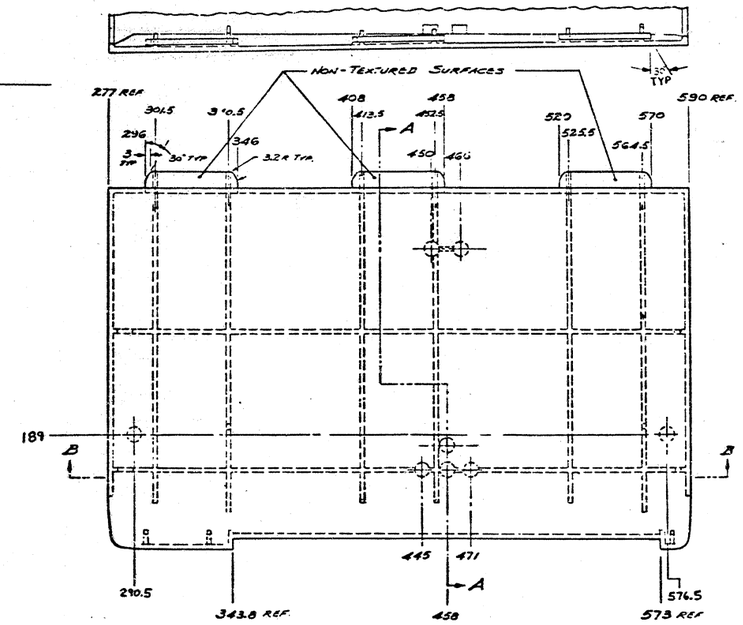

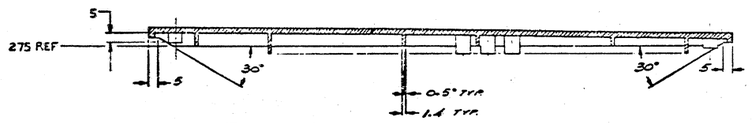

SECTION B-B

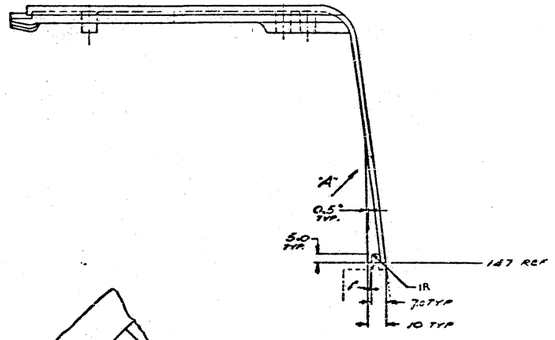

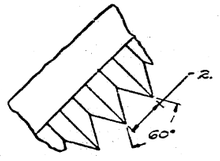

DETAIL OF SERRATION AT "A"
SCALE 10X

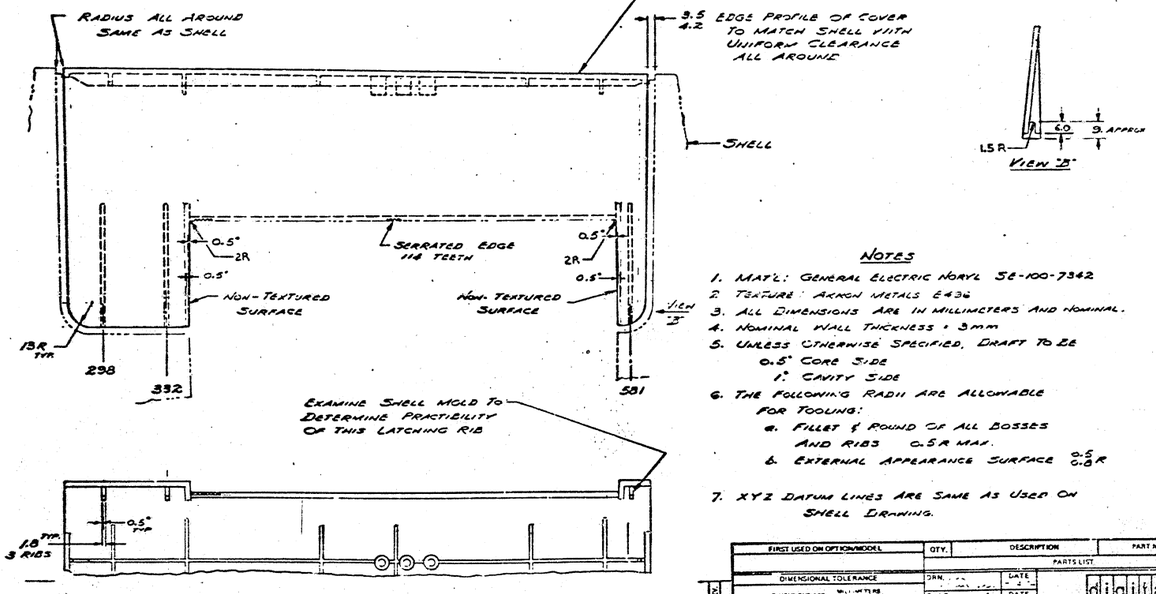

NOTES

1. MATL: GENERAL ELECTRIC NORYL SE-100-7342
2. TEXTURE: ARKON METALS E436
3. ALL DIMENSIONS ARE IN MILLIMETERS AND NOMINAL.
4. NOMINAL WALL THICKNESS = 3mm
5. UNLESS OTHERWISE SPECIFIED, DRAFT TO BE
   0.5° CORE SIDE
   1° CAVITY SIDE
6. THE FOLLOWING RADII ARE ALLOWABLE FOR TOOLING:
   a. FILLET & ROUND OF ALL BOSSES AND RIBS 0.5R MAX.
   b. EXTERNAL APPEARANCE SURFACE 0.5 / 0.8R
7. XYZ DATUM LINES ARE SAME AS USED ON SHELL DRAWING.

FIRST USED ON OPTION/MODEL	QTY.	DESCRIPTION	PART NO.
		PARTS LIST	

DIMENSIONAL TOLERANCE
DIMENSIONS ARE MILLIMETERS UNLESS OTHERWISE SPECIFIED

MILLIMETERS	INCHES	ANGLES
XXX ±0.10	XXX ±.005	±1° 30'
XX ±0.5	XX ±.02	
X ±1.	X ±.1	

THIRD ANGLE PROJECTION

REMOVE BURRS AND BREAK SHARP CORNERS SURFACE QUALITY ✓

MATERIAL GENERAL ELECTRIC NORYL SE-100-7342

FINISH ARKON METALS E436

	NAME	DATE
DRN.		
CHK'D.		
ENG.		
PROJ. ENG.		
PROD.		

NEXT HIGHER ASSY.

digital

TITLE: COPIER COVER VT 50

SIZE: E | CODE: MD | NUMBER: 7412574-00

SCALE: 1/1 | SHEET 1 OF 1 | DIST

CHG NO. | REVISIONS | REV.

"THIS DRAWING AND SPECIFICATIONS, HEREIN, ARE THE PROPERTY OF DIGITAL EQUIPMENT CORPORATION AND SHALL NOT BE REPRODUCED OR COPIED OR USED IN WHOLE OR IN PART AS THE BASIS FOR THE MANUFACTURE OR SALE OF ITEMS WITHOUT WRITTEN PERMISSION. COPYRIGHT © 1974, DIGITAL EQUIPMENT CORPORATION"

NOTES:

1. MATERIAL TO BE: .020 THK BERYLIUM COPPER, 1/2 HARD.

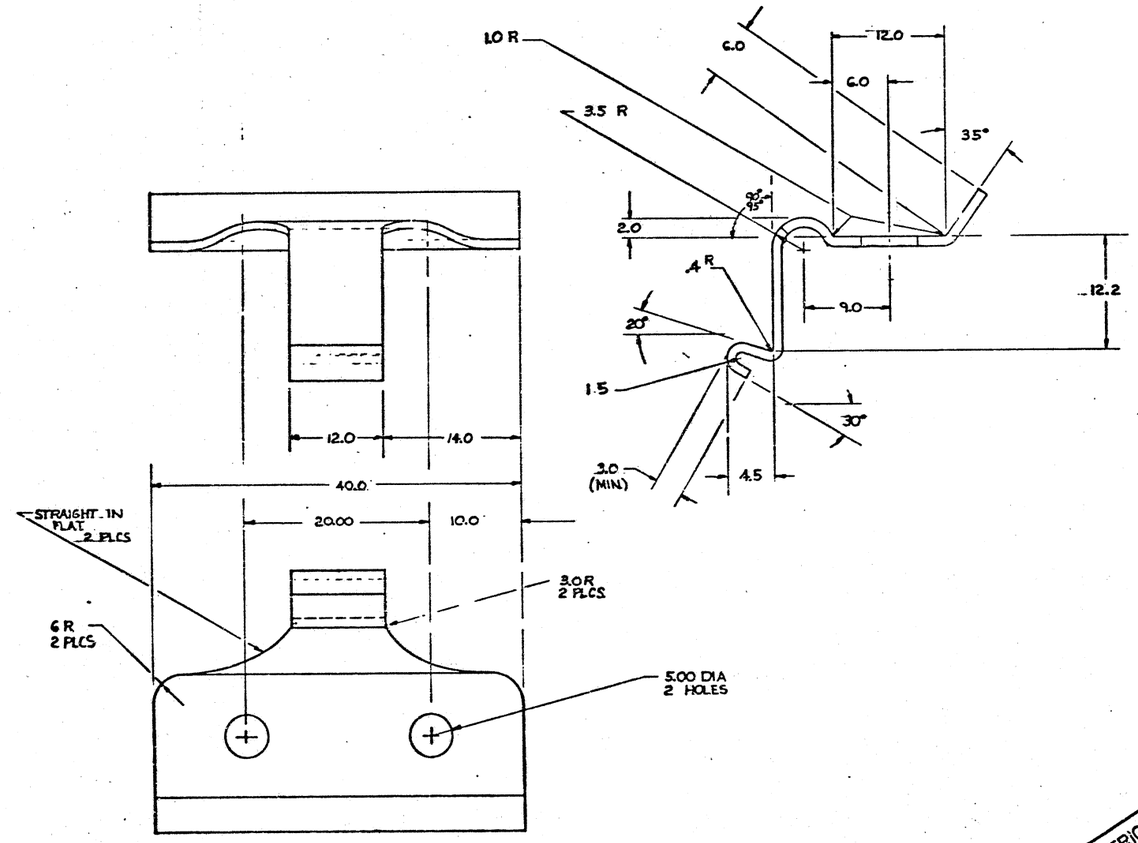

METRIC DIMENSIONS

DESCRIPTION	DWG. PART NO.	ITEM NO.
UNLESS OTHERWISE SPECIFIED DIMENSIONS ARE IN MILLIMETERS		

ANGLES ±0° 30'	CLASS OF ACCURACY (CHECK ONE)	NOMINAL DIMENSION RANGE MILLIMETER					
SURFACE QUALITY IN MICROINCHES		OVER 1 TO 5	OVER 5 TO 30	OVER 30 TO 100	OVER 100 TO 300	OVER 300 TO 1000	OVER 1000 TO 2000
	MEDIUM	±0.1	±0.2	±0.3	±0.4	±0.6	±1.0
	PREFERRED	±0.3	±0.4	±0.6	±1.0	±1.6	±2.5

QUANTITY & VARIATION

THIRD ANGLE PROJECTION

REMOVE BURRS AND BREAK SHARP CORNERS

DO NOT SCALE DWG

MATERIAL: SEE NOTE #1

FINISH: NONE

DRN.	R.A. HUTNAK	12/18/74
CHK'D	[illegible]	2/3/75
ENG.	[illegible]	2/3/75
PROJ. ENG.	[illegible]	2/3/75
PROD.	[illegible]	2/3/75
NEXT HIGHER ASSY.		
L.P.D.	7010847-0-0	
SCALE	4/1	
SHEET	1 OF 1	

FIRST USED ON: VT50

digital

TITLE: BRACKET, COPIER COVER

SIZE	CODE	NUMBER	REV.
1	MD	7413330-0-0	

DIST.

REVISIONS: CHK | CHANGE NO. | REV.

BLC FORM NO. 843-350

1 MD 7413330-0-0

"THIS DRAWING AND SPECIFICATIONS, HEREIN, ARE THE PROPERTY OF DIGITAL EQUIPMENT CORPORATION AND SHALL NOT BE REPRODUCED OR COPIED OR USED IN WHOLE OR IN PART AS THE BASIS FOR THE MANUFACTURE OR SALE OF ITEMS WITHOUT WRITTEN PERMISSION.
COPYRIGHT © 1975, DIGITAL EQUIPMENT CORPORATION"

NOTES

1. MAT'L TO BE: .020 THK BERELIUM COPPER, 1/2 HARD

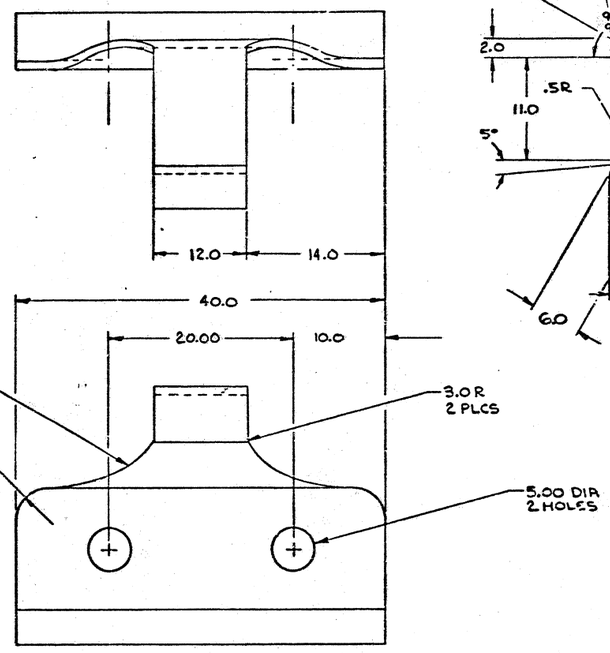

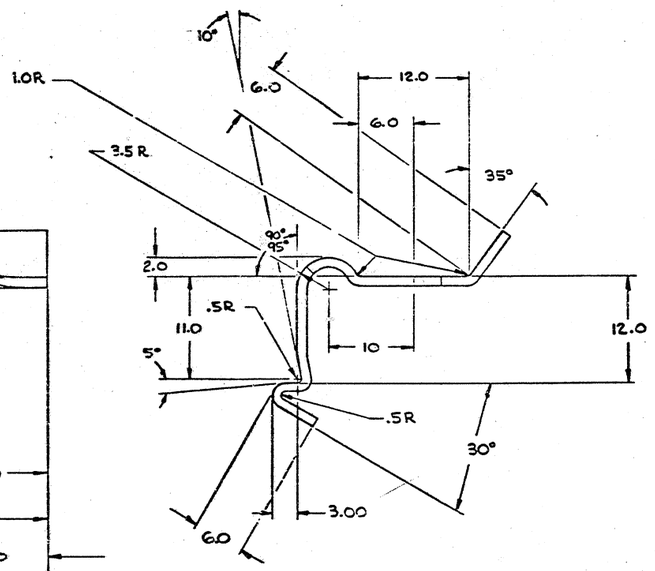

METRIC DIMENSIONS

| | | |

"THIS DRAWING AND SPECIFICATIONS, HEREIN, ARE THE PROPERTY OF DIGITAL EQUIPMENT CORPORATION AND SHALL NOT BE REPRODUCED OR COPIED OR USED IN WHOLE OR IN PART AS THE BASIS FOR THE MANUFACTURE OR SALE OF ITEMS WITHOUT WRITTEN PERMISSION.
COPYRIGHT © 1975, DIGITAL EQUIPMENT CORPORATION"

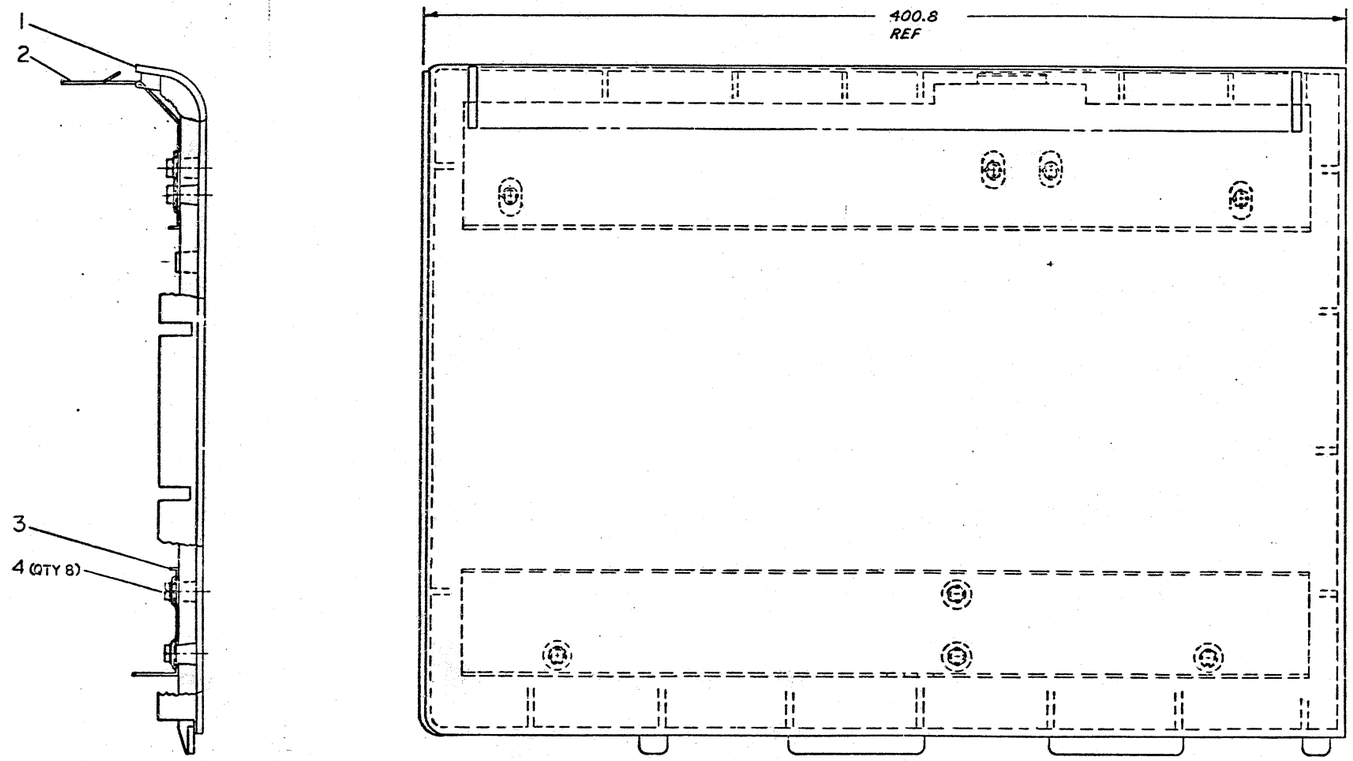

METRIC DIMENSIONS

8	SCREW, HEX HD. #8 x 3/4	9009681-5	4
1	STIFFENER, BLANK COVER	D-MD-7413331-0-0	3
1	HOLD DOWN, BLANK COVER	D-MD-7413333-0-0	2
1	FIXED COVER	D-MD-7412573-0-0	1
	DESCRIPTION	DWG/PART NO.	ITEM NO

UNLESS OTHERWISE SPECIFIED DIMENSIONS ARE IN MILLIMETERS

ANGLES ±0° 30'
SURFACE QUALITY IN MICROINCHES
CLASS OF ACCURACY (CHECK ONE)
NOMINAL DIMENSION RANGE MILLIMETER

	OVER 1 TO 5	OVER 5 TO 30	OVER 30 TO 100	OVER 100 TO 300	OVER 300 TO 1000	OVER 1000 TO 2000
MEDIUM	±0.1	±0.2	±0.3	±0.4	±0.6	±1.0
PREFERRED	±0.3	±0.4	±0.6	±1.0	±1.6	±2.4

QUANTITY & VARIATION

THIRD ANGLE PROJECTION

REMOVE BURRS AND BREAK SHARP CORNERS

DO NOT SCALE DWG

MATERIAL SEE PARTS LIST

FINISH

DRN 1-23-75
CHK'D
ENG
PROJ. ENG
PROD.

NEXT HIGHER ASSY. 2-UA-VT50-0-0
SCALE 1/1
SHEET 1 OF 1

FIRST USED ON VT50

digital

TITLE COVER BLANK FIXED ASSEMBLY

SIZE 1 | CODE AD | NUMBER 7010846-0-0 | REV.

DIST.

REVISIONS | CHANGE NO. | REV.

DEC FORM NO. DA1-150

1 AD 7010846-0-0

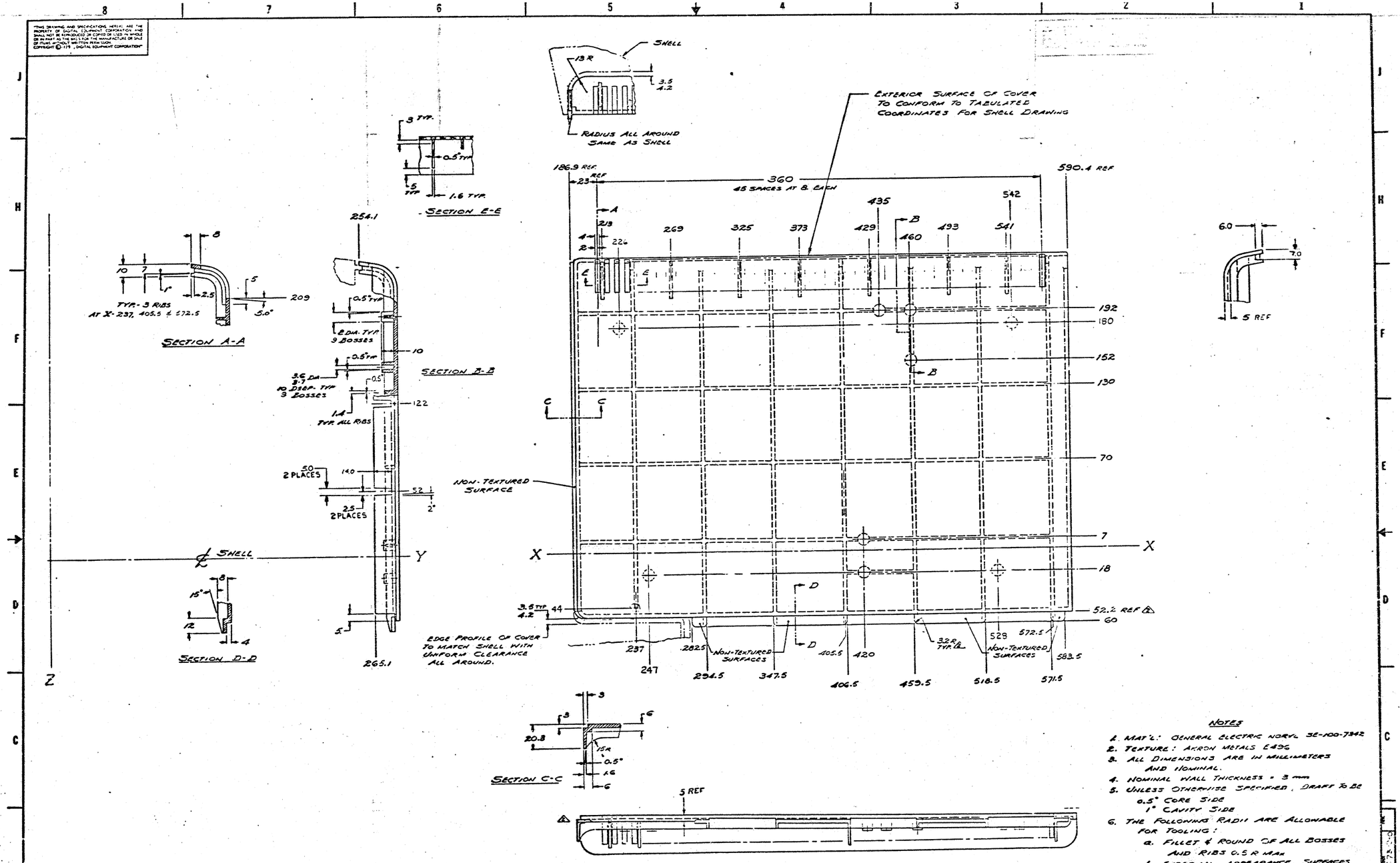

NOTES

1. MAT'L: GENERAL ELECTRIC NORYL SE-100-7342
2. TEXTURE: AKRON METALS E496
3. ALL DIMENSIONS ARE IN MILLIMETERS AND NOMINAL.
4. NOMINAL WALL THICKNESS = 3 mm
5. UNLESS OTHERWISE SPECIFIED, DRAFT TO BE
   0.5° CORE SIDE
   1° CAVITY SIDE
6. THE FOLLOWING RADII ARE ALLOWABLE FOR TOOLING:
   a. FILLET & ROUND OF ALL BOSSES AND RIBS 0.5 R MAX
   b. EXTERNAL APPEARANCE SURFACES 0.5 / 0.8 R
7. XYZ DATUM LINES ARE SAME AS USED ON SHELL DRAWING.

FIRST USED ON OPTION/MODEL | QTY. | DESCRIPTION | PART NO. | ITEM NO.

PARTS LIST

DIMENSIONAL TOLERANCE — DIMENSIONS ARE MILLIMETERS / INCHES — UNLESS OTHERWISE SPECIFIED

MILLIMETERS	INCHES	ANGLES
X.XX = ±0.10	.XXX = ±.005	15° 30'
X.X = ±0.5	.XX = ±.02	
X = ±2	.X = ±.1	

THIRD ANGLE PROJECTION

REMOVE BURRS AND BREAK SHARP CORNERS SURFACE QUALITY ✓

MATERIAL: NORYL SE-100-7342

FINISH: AKRON METALS E496

DRN. | DATE | CHK'D | DATE | ENG. | DATE | PROJ. ENG. | DATE | PROD. | DATE

NEXT HIGHER ASSY.

SCALE 1/1 | SHEET 1 OF 1

digital

TITLE: FIXED COVER VT50

SIZE E | CODE VD | NUMBER 7412573[illegible] | REV.

DIST.

"THIS DRAWING AND SPECIFICATIONS, HEREIN, ARE THE PROPERTY OF DIGITAL EQUIPMENT CORPORATION AND SHALL NOT BE REPRODUCED OR COPIED OR USED IN WHOLE OR IN PART AS THE BASIS FOR THE MANUFACTURE OR SALE OF ITEMS WITHOUT WRITTEN PERMISSION.
COPYRIGHT © 1972, DIGITAL EQUIPMENT CORPORATION"

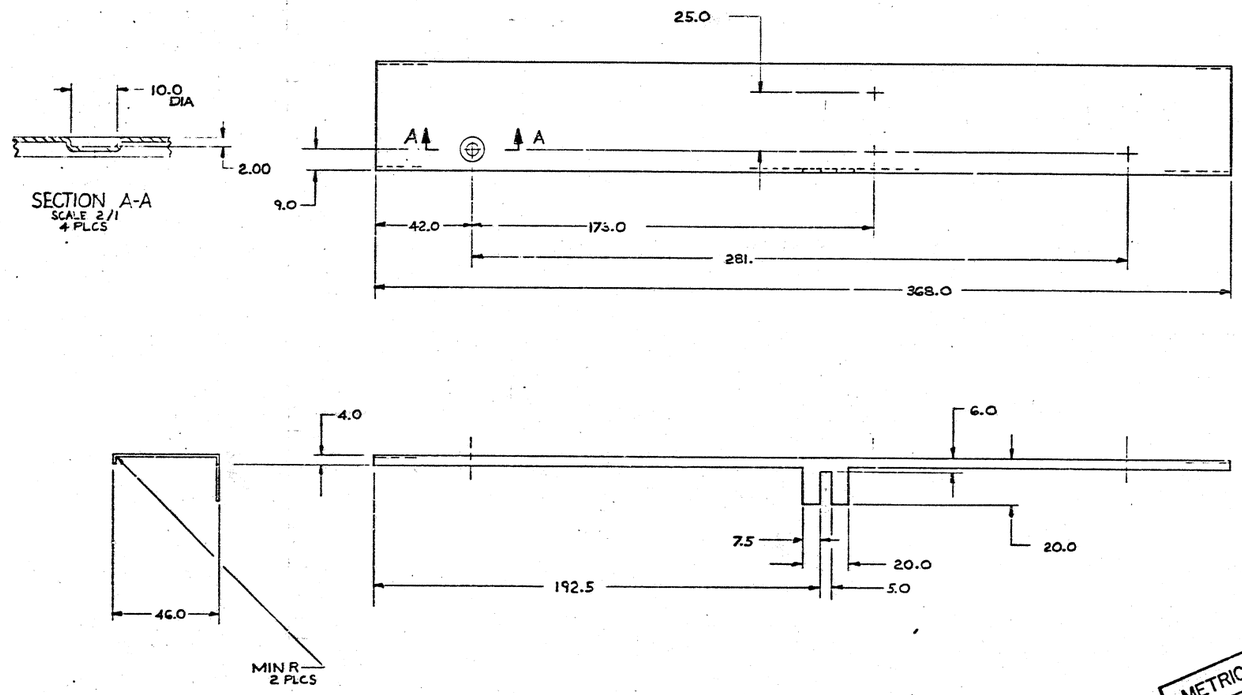

METRIC DIMENSIONS

DESCRIPTION	DWG./PART NO.	ITEM NO.
UNLESS OTHERWISE SPECIFIED DIMENSIONS ARE IN INCHES		

ANGLES ±0° 30'	CLASS OF ACCURACY (CHECK ONE)	NOMINAL DIMENSION RANGE INCHES: OVER 0 TO 0.2	OVER 0.2 TO 1.2	OVER 1.2 TO 4.0	OVER 4.0 TO 12.0	OVER 12.0 TO 40.0	OVER 40.0 TO 80.0
SURFACE QUALITY IN MICROINCHES	MEDIUM	±.004	±.008	±.012	±.016	±.024	±.04
	PREFERRED	±.012	±.016	±.025	±.04	±.063	±.1

QUANTITY & VARIATION

THIRD ANGLE PROJECTION

REMOVE BURRS AND BREAK SHARP CORNERS

DO NOT SCALE DWG

MATERIAL .048 INCH THK C.R.S.

FINISH 9200120-68

DRN. [illegible]
CHK'D [illegible]
ENG. [illegible]
PROJ. ENG. [illegible]
PROD. [illegible]
NEXT HIGHER ASSY. 1-AD-7012-46-0-0
SCALE 1/1
SHEET 1 OF 1

FIRST USED ON VT50

digital

TITLE STIFFNER, BLANK COVER

SIZE D | CODE | NUMBER 7413331-0-0 | REV.

DIST.

REVISIONS: CHK | CHANGE NO. | REV.

DEC FORM NO. BND 300-C

D MC 7413331-0-0

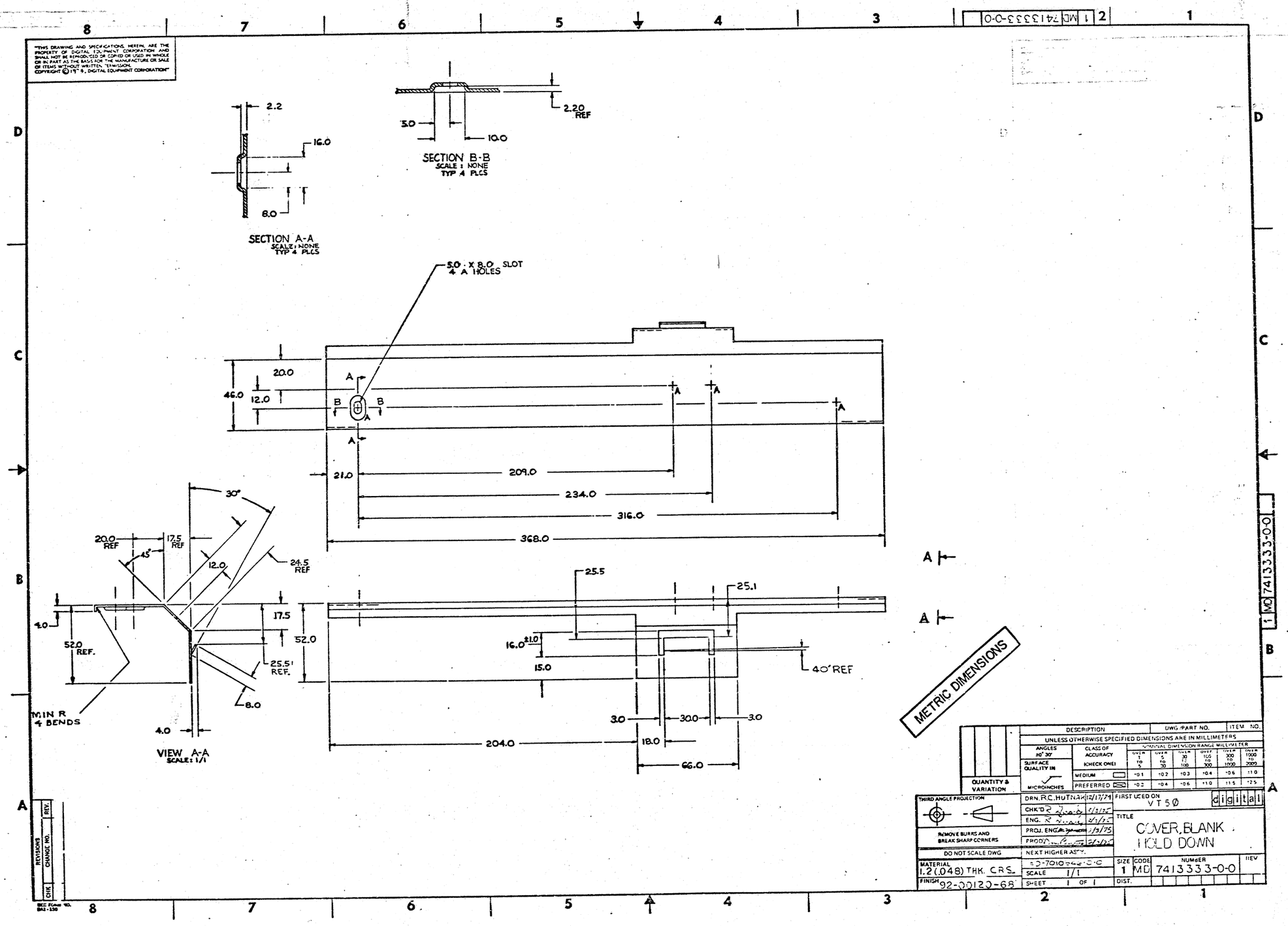

"THIS DRAWING AND SPECIFICATIONS, HEREIN, ARE THE PROPERTY OF DIGITAL EQUIPMENT CORPORATION AND SHALL NOT BE REPRODUCED OR COPIED OR USED IN WHOLE OR IN PART AS THE BASIS FOR THE MANUFACTURE OR SALE OF ITEMS WITHOUT WRITTEN PERMISSION. COPYRIGHT © 19 , DIGITAL EQUIPMENT CORPORATION"
SECTION A-A
SCALE: NONE
TYP 4 PLCS
SECTION B-B
SCALE: NONE
TYP 4 PLCS
5.0 X 8.0 SLOT
4 A HOLES
VIEW A-A
SCALE: 1/1
MIN R
4 BENDS
METRIC DIMENSIONS
DESCRIPTION
DWG/PART NO.
ITEM NO.
UNLESS OTHERWISE SPECIFIED DIMENSIONS ARE IN MILLIMETERS
ANGLES ±0° 30'
SURFACE QUALITY IN MICROINCHES
CLASS OF ACCURACY (CHECK ONE)
MEDIUM
PREFERRED
QUANTITY & VARIATION
THIRD ANGLE PROJECTION
REMOVE BURRS AND BREAK SHARP CORNERS
DO NOT SCALE DWG
MATERIAL 1.2 (.048) THK. CRS.
FINISH 92-00120-68
DRN. R.C. HUTNAK 12/17/74
CHK'D
ENG.
PROJ. ENG.
PROD.
NEXT HIGHER ASSY.
SCALE 1/1
SHEET 1 OF 1
FIRST USED ON VT50
digital
TITLE COVER, BLANK HOLD DOWN
SIZE 1
CODE MD
NUMBER 7413333-0-0
REV
DIST.
REVISIONS
CHANGE NO.
REV.
CHK

"THIS DRAWING AND SPECIFICATIONS, HEREIN, ARE THE PROPERTY OF DIGITAL EQUIPMENT CORPORATION AND SHALL NOT BE REPRODUCED OR COPIED OR USED IN WHOLE OR IN PART AS THE BASIS FOR THE MANUFACTURE OR SALE OF ITEMS WITHOUT WRITTEN PERMISSION.
COPYRIGHT ©1975 DIGITAL EQUIPMENT CORPORATION"

LEGEND	
NUMBER	VARIATION
7010861-0	115V, 60 HZ
7010861-1	220/240V, 50-60 HZ
7010861-2	100V/127V

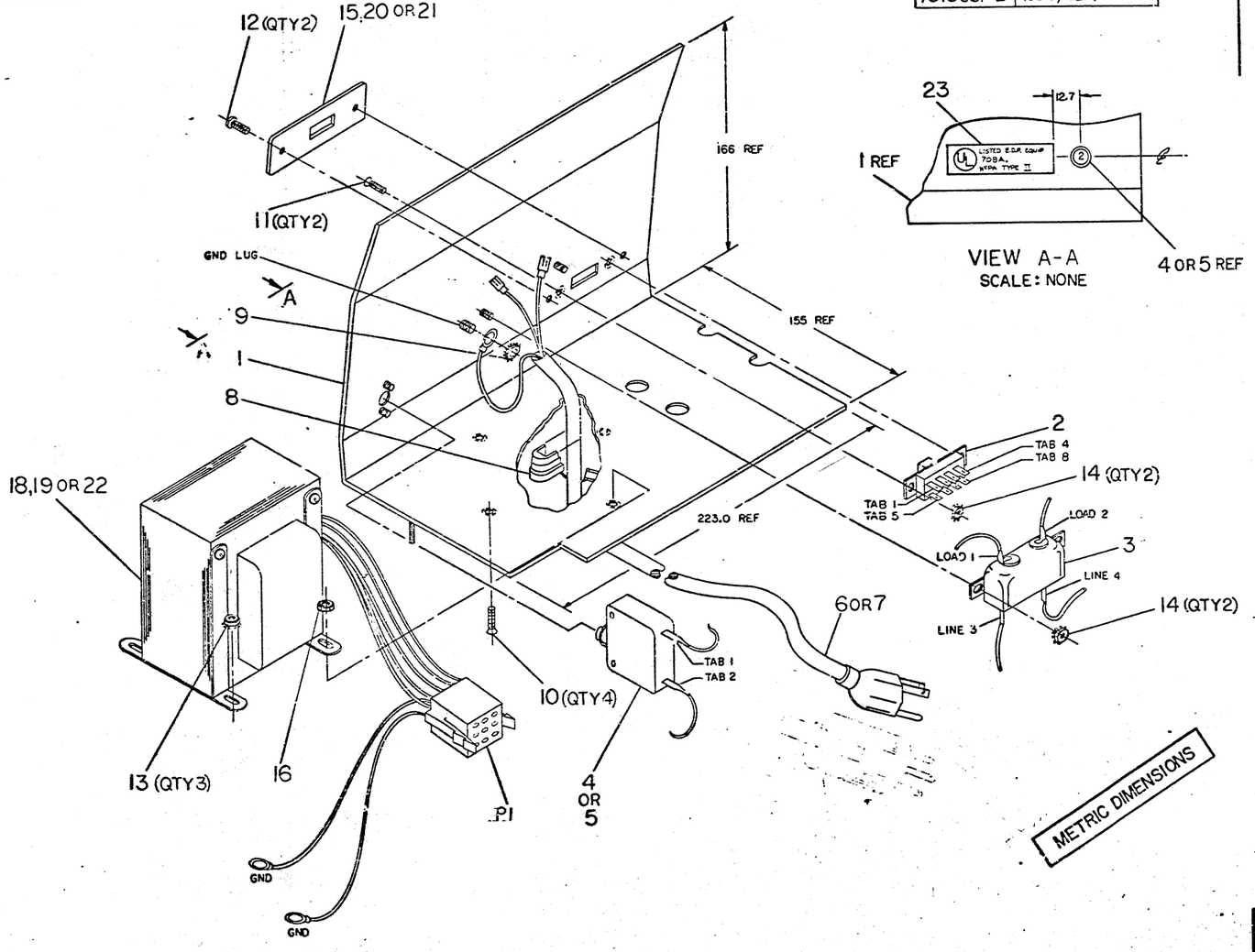

VIEW A-A
SCALE: NONE

METRIC DIMENSIONS

1	1	1	STICKER, VT50 U.L.	AX-7413213-0-0	23
1	–	–	HARNESS, TRANSFORMER (50HZ)	3-IA-7011131-1-0	22
1	–	–	PLATE, VT50-51	2-IA-7413407-3-0	21
–	1	–	PLATE, VT50-51	2-IA-7413407-2-0	20
–	1	–	HARNESS, TRANSFORMER (60HZ)	3-IA-7011131-0-0	19
–	–	1	HARNESS, TRANSFORMER (50HZ)	1-IA-7011130-0-0	18
A/R	A/R	A/R	TUBING, SHRINKABLE WHT	9107253-09	17
1	1	1	NUT, 8-32, HEX	9006561	16
–	–	1	PLATE, VT50-51	2-IA-7413407-1-0	15
4	4	4	NUT, 4-40, KEP	9006557	14
3	3	3	NUT, 8-32, KEP	9006563	13
2	2	2	SCREW, 8-32X.250 BUTTON HD	9009744	12
2	2	2	SCREW, 4-40X.312 FLATHEAD	9006010-02	11
4	4	4	SCREW, 8-32X.312 FLATHEAD	9006036-02	10
1	1	1	NUT, 10-32, KEP	9006565	9
1	1	1	RELIEF, CABLE STRAIN	900-492-02	8
1	1	–	CORD POWER, 220/240	3-IA-7011019-1	7
–	–	1	CORD POWER, 115V	3-IA-7011019-0	6
–	1	–	BREAKER CIRCUIT	1210242-01	5
1	–	1	BREAKER CIRCUIT	1210242-00	4
1	1	1	FILTER	1212003	3
1	1	1	SWITCH	1211997	2
1	1	1	PLATE MTG TRANSFORMER	2-IA-7412850-0-0	1
7010861-2	7010861-1	7010861-0	DESCRIPTION	DWG/PART NO.	ITEM NO.

UNLESS OTHERWISE SPECIFIED DIMENSIONS ARE IN MILLIMETERS

		NOMINAL DIMENSION RANGE IN MILLIMETER					
ANGLES ±0° 30'	CLASS OF ACCURACY	OVER 1 TO 10	OVER 10 TO 30	OVER 30 TO 100	OVER 100 TO 300	OVER 300 TO 1000	OVER 1000 TO 3000
SURFACE QUALITY IN MICROINCHES	CHECK ONE						
	MEDIUM	±0.1	±0.2	±0.3	±0.4	±0.6	±1.0
	PREFERRED	±0.3	±0.4	±0.6	±1.0	±1.5	±2.5

QUANTITY & VARIATION

THIRD ANGLE PROJECTION

REMOVE BURRS AND BREAK SHARP CORNERS

DO NOT SCALE DWG

MATERIAL: SEE PARTS LIST

FINISH

DRN: [illegible] 9-5-75 FIRST USED ON: VT50

CHK'D: [illegible]

ENG: [illegible]

PROJ. ENG: [illegible]

PROD. MGR: [illegible]

NEXT HIGHER ASSY.: G-UA-VT50-0-0

SCALE: NONE

SHEET 1 OF 2

TITLE: TRANSFORMER ASSY

SIZE	CODE	NUMBER	REV.
1	AD	7010861-0-0	

DIST.

REVISIONS			
	CHK	CN/ECO NO.	REV.
1-2		1-5-75	1/1

BSC ECO NO. BNC-150

"THIS DRAWING AND SPECIFICATIONS HEREIN ARE THE PROPERTY OF DIGITAL EQUIPMENT CORPORATION AND SHALL NOT BE REPRODUCED OR COPIED OR USED IN WHOLE OR IN PART AS THE BASIS FOR THE MANUFACTURE OR SALE OF ITEMS WITHOUT WRITTEN PERMISSION.
COPYRIGHT © 1975, DIGITAL EQUIPMENT CORPORATION"

115 VOLTS
60 HZ

WIRE TABLE									
ITEM NO.	DESCRIPTION		FROM			TO			SIGNAL
	AWG	COLOR	POINT	CONNECTION	WITH	POINT	CONNECTION	WITH	
18	—	—	—	P1	—	—	—	—	
↑	—	—	1	—	—	—	S1-5	—	
	—	—	2	—	—	—	S1-1	—	
	—	—	3	—	—	—	—	—	NOT USED
	—	—	4	—	—	—	—	—	NOT USED
	18	BLK	13	FL LOAD 1	17	18	CB-1	17	
	14	BLK	14	S1-2	—	17	CB-2	17	
	14	WHT	15	S1-6	—	16	FL LOAD 2	17	
↓	18	GRN	19	—	—	—	GND	—	
18	18	GRN	20	—	—	—	GND	—	
6	18	WHT	—	—	—	—	FL LINE 3	17	
6	18	BLK	—	—	—	—	FL LINE 4	17	
6	18	GRN	—	—	—	—	GND	-	

100/127 VOLTS
220/240 VOLTS
50-60 HZ

WIRE TABLE									
ITEM NO.	DESCRIPTION		FROM			TO			SIGNAL
	AWG	COLOR	POINT	CONNECTION	WITH	POINT	CONNECTION	WITH	
19 OR 22	—	—	—	P1	—	—	—	—	
↑	16	BLK	1	—	—	—	S1-1	—	
	18	GRN	2	—	—	—	GND	—	
	18	GRN	3	—	—	—	GND	—	
	14	BLK	12	—	—	—	CB-2	17	
	18	BLK	17	CB-1	15	18	FL LOAD 1	17	
	14	WHT	19	—	—	—	FL LOAD 2	17	
	18	BLK	13	—	—	—	S1-2	—	
	18	BLK	14	—	—	—	S1-3	—	
	18	WHT	15	—	—	—	S1-5	—	
	18	WHT	16	—	—	—	S1-6	—	
	18	BLK/WHT	22	—	—	—	S1-4	—	
	18	WHT	24	—	—	—	S1-7	—	
	18	WHT	25	—	—	—	S1-8	—	
↓	16	RED/YEL	26	—	—	—	—	—	NOT USED
19 OR 22	16	RED/YEL	27	—	—	—	—	—	NOT USED
7	18	BRN	—	—	—	—	FL LINE 4	17	
7	18	BLU	—	—	—	—	FL LINE 3	17	
7	18	GRN/YEL	—	—	—	—	GND	9	

REVISIONS		
CHK	CHANGE NO.	REV.

TITLE TRANSFORMER ASSY
SIZE 1 CODE AD NUMBER 7010861-0-0 REV.
SCALE NONE SHEET 2 OF 2 DIST.

DEC FORM NO. DA1-151

1 AD 7010861-0-0

"THIS DRAWING AND SPECIFICATIONS, HEREIN, ARE THE PROPERTY OF DIGITAL EQUIPMENT CORPORATION AND SHALL NOT BE REPRODUCED OR COPIED OR USED IN WHOLE OR IN PART AS THE BASIS FOR THE MANUFACTURE OR SALE OF ITEMS WITHOUT WRITTEN PERMISSION.
COPYRIGHT © 1974, DIGITAL EQUIPMENT CORPORATION"

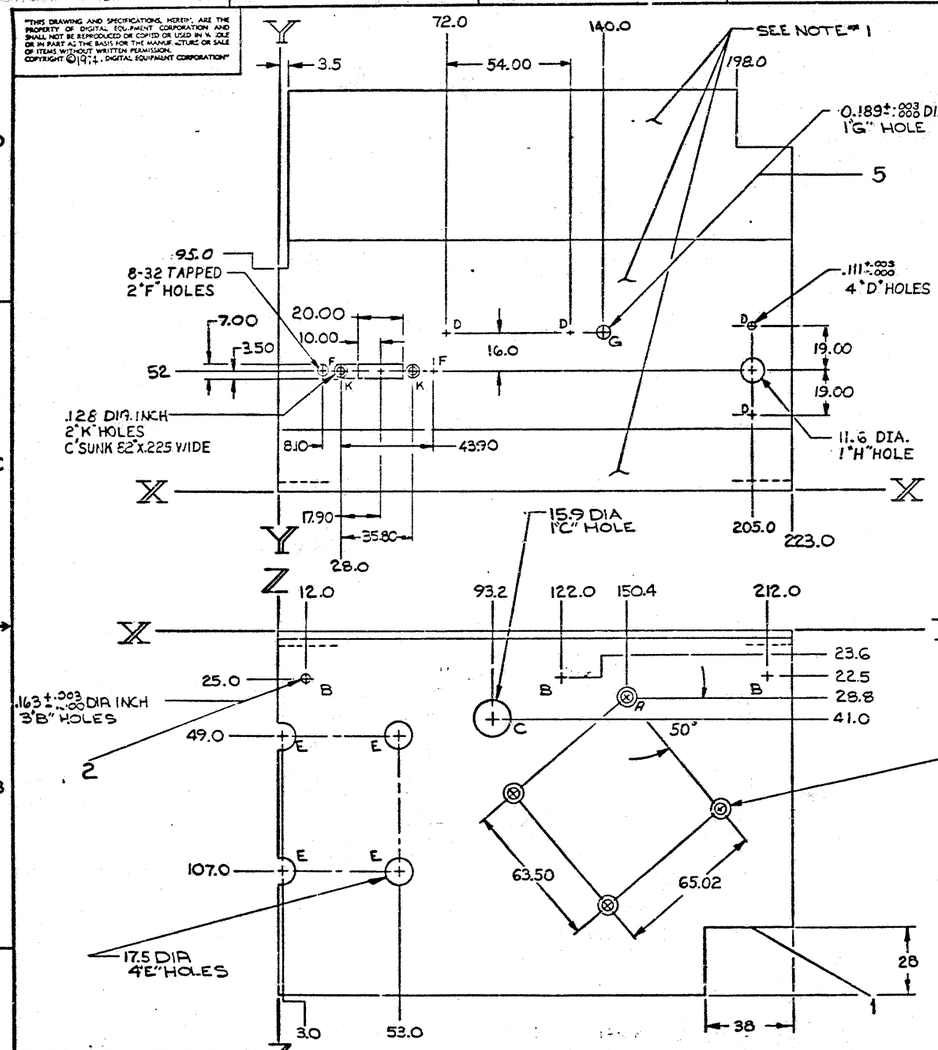

NOTES

1. TEXTURE THIS SURFACE AND THE EDGES OF THIS SURFACE ONLY. DO NOT PAINT THE BOTTOM OR THE BACKSIDE. SLIGHT OVERSPRAY PERMITTED.
2. ALLOY 1100 PREFERED FOR MAXIMUM THERMAL CONDUCTIVITY. ALLOY 3003 ACCEPTABLE. ANY HARDNESS CONDITION ACCEPTABLE.

ECO HISTORY

REV D

ZONE	CHANGE	NAS
7D	95.0	105.0
5D	ADDED 198.0 DIM	
4D	ADDED 20.0 DIM	

METRIC DIMENSIONS

FOR ECO REVISION HISTORY SEE NOTES

REVISIONS	REV.	CHK	CHANGE NO.
C4 JUN 11-27-74 R. DOANE	A	EM	7412850-00001
C5 JUL 11-14-74 R. DOANE	B	EM	7412850-00002
C6 AUG 12-13-74 R. DOANE	C	EM	7412850-00003
C7 SEP 12-26-74 R. GIRARD	D	EM	7412850-00004

1	STUD #10-32 X 1/2	9007173	5
4	STUD #4-40 X (.31 IN) LG	9007162	4
~~4~~	~~STUD #4-40 X (.50 IN) LG~~	~~9007163~~	~~3~~
3	STUD #8-32 X (1.0 IN) LG	9007172	2
1	PLATE, MTG. TRANS.		1
QTY.	DESCRIPTION	PART NO.	ITEM NO.

PARTS LIST

FIRST USED ON OPTION/MODEL	VT50
DIMENSIONAL TOLERANCE	DIMENSIONS ARE MILLIMETERS UNLESS OTHERWISE SPECIFIED
MILLIMETERS	.XXX ±0.10, .XX ±0.05, .X ±0.2, ANGLES ±0° 30'
THIRD ANGLE PROJECTION	REMOVE BURRS AND BREAK SHARP CORNERS SURFACE QUALITY ✓
MATERIAL 3.75 MM (.125) THK AL SEE NOTE #2	NEXT HIGHER ASSY. E-UA-VT50-0-0
FINISH (SEE NOTE 1) 92-00151-47	SCALE 1/1, SHEET 1 OF 1

DRN. DATE
CHK'D DATE 10-3-74
ENG. DATE 9-30-74
PROJ. ENG. DATE
PROD. DATE 10-24-74

digital

TITLE: PLATE, MTG. TRANSFORMER

SIZE	CODE	NUMBER	REV.
D	IA	7412850-0-0	D

DIST

DIA 7412850-C-0 REV D

"THIS DRAWING AND SPECIFICATIONS, HEREIN, ARE THE PROPERTY OF DIGITAL EQUIPMENT CORPORATION AND SHALL NOT BE REPRODUCED OR COPIED OR USED IN WHOLE OR IN PART AS THE BASIS FOR THE MANUFACTURE OR SALE OF ITEMS WITHOUT WRITTEN PERMISSION
COPYRIGHT © 1975 DIGITAL EQUIPMENT CORPORATION"

LEGEND	
PART NO.	VARIATION
7011019-0	115 V
7011019-1	220/240/127 V

NOTES:

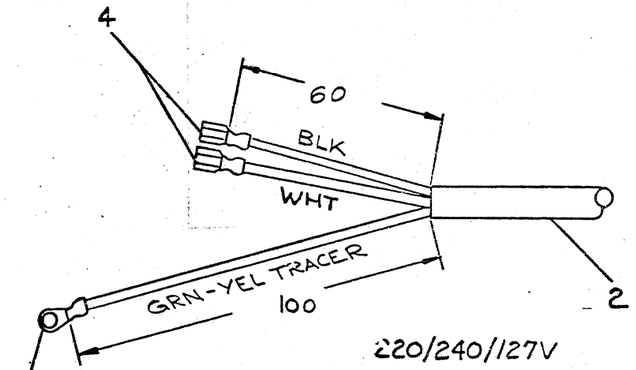

220/240/127V

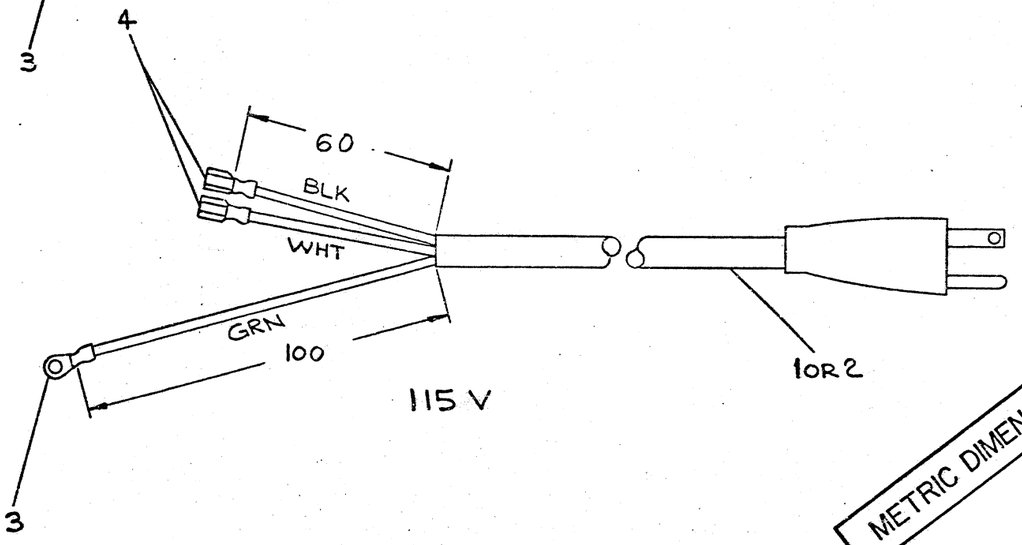

115 V

METRIC DIMENSIONS

7011019-1	7011019-0			
2	2	CONN, FASTON (RED)	9007928-01	4
1	1	LUG, BARREL RING (BLU)	9007917	3
1	-	POWER CORD 220/240/127	1700043	2
-	1	POWER CORD 115 V	1700015-9	1
FIRST USED ON OPTION/MODEL	QTY.	DESCRIPTION	PART NO.	ITEM NO.

PARTS LIST

VT5Ø

UNLESS OTHERWISE SPECIFIED DIMENSION IN INCHES
TOLERANCES
DECIMALS: .xxx = .005, .xx = .02, .x = .1
ANGLES: ±0 30'
REMOVE BURRS AND BREAK SHARP CORNERS SURFACE QUALITY ✓

DRN.		DATE 3/11/75
CHK'D		DATE 4-13-75
ENG.		DATE 4-25-75
PROJ. ENG.		DATE 4-25-75
PROD.		DATE 5/7/75

MATERIAL: SEE PARTS LIST
FINISH
NEXT HIGHER ASSY.: 1-AD-7010861-0-0
SCALE: NONE
SHEET 1 OF 1

digital EQUIPMENT CORPORATION MAYNARD MASSACHUSETTS

TITLE: POWER CORD (VT5Ø)

SIZE	CODE	NUMBER	REV.
C	IA	7011019-0-0	

DIST.

REVISIONS: REV. | CHANGE NO. | CHK

DEC FORM NO. DRC 100-B

NUMBER 7011019-0-0 REV. C

"THIS DRAWING AND SPECIFICATIONS, HEREIN, ARE THE PROPERTY OF DIGITAL EQUIPMENT CORPORATION AND SHALL NOT BE REPRODUCED OR COPIED OR USED IN WHOLE OR IN PART AS THE BASIS FOR THE MANUFACTURE OR SALE OF ITEMS WITHOUT WRITTEN PERMISSION.
COPYRIGHT © 1975 DIGITAL EQUIPMENT CORPORATION"

WIRE TABLE

ITEM NO	DESCRIPTION AWG	COLOR	FROM POINT	FROM CONNECTION	FROM TERM	TO POINT	TO CONNECTION	TO TERM	REMARKS
1	18	—	—	T1-5	—	1	—	4 & 5	
	18	—	—	T1-4	—	2	—	4 & 5	
	16	—	—	T1-3	—	3	—	7	SEE NOTE #1
	16	—	—	T1-2	—	4	—	7	SEE NOTE #1
8	18	GRN	5	P1-1	3	20	—	6	
8	18	GRN	6	P1-2	3	19	—	6	
1	16	—	—	T1-1	—	7	P1-6	3	
		—	—	T1-6	—	8	P1-9	3	
		—	—	T1-7	—	9	P1-7	3	
		—	—	T1-8	—	10	P1-8	3	
		—	—	T1-9	—	11	P1-5	3	
	16	—	—	T1-10	—	12	P1-4	3	
9	18	BLK	13	—	12	18	—	12	
10	14	BLK	14	—	4 & 5	17	—	12	
11	14	WHT	15	—	4 & 5	16	—	12	

NOTE:
1. POINTS 3 & 4 ARE NOT USED AT PRESENT TIME, COIL WIRES AND HOLD IN PLACE WITH CABLE TIE.
   ITEM #7, SHRINK TUBING TO BE USED ON END OF WIRE.

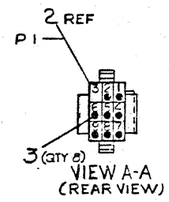

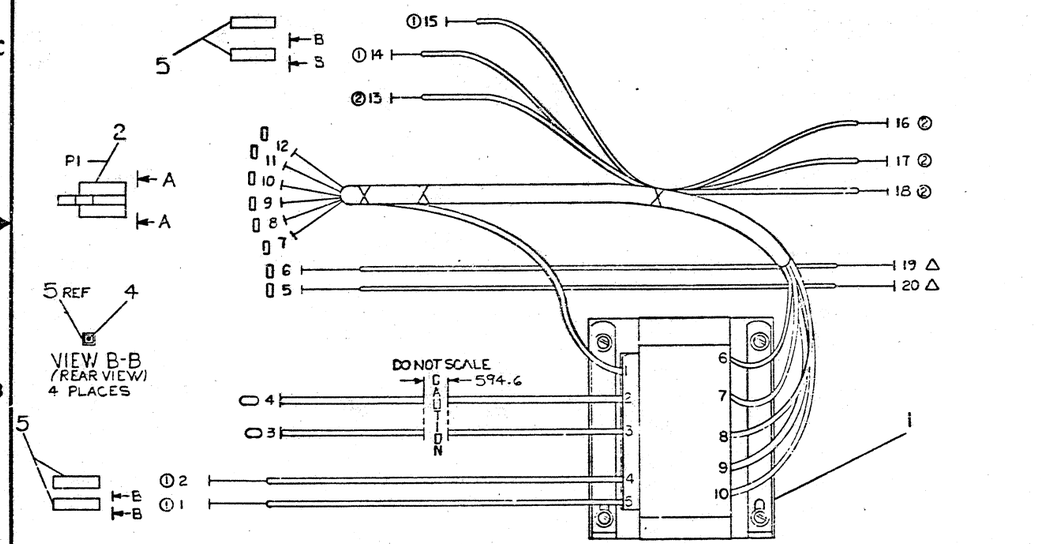

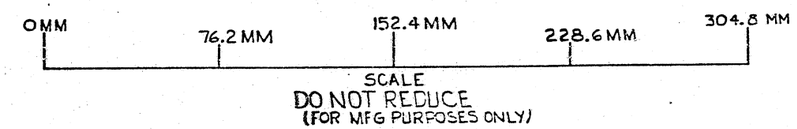

SCALE
DO NOT REDUCE
(FOR MFG PURPOSES ONLY)

METRIC DIMENSIONS

X	3	CABLE TIES	9007031	13
②	4	QUICK CONN. FEMALE	9007228	12
	AR	WIRE, #14 AWG, WHT	9107370-99	11
	AR	WIRE, #14 AWG, BLK	9107370-00	10
	AR	WIRE, #18 AWG, BLK	9107360-00	9
	AR	WIRE #18 AWG GRN	9107360-55	8
○	AR	TUBING, SHRINK WHT	9107253-09	7
△	2	TERM., QUICKCONNECT	9007930-00	6
	4	HOUSING (FASTAB)	1210820-01	5
①	4	MINI FASTAB	1210820-04	4
▯	8	SOCKET, TERM	1209379-00	3
	1	CONN, 9 SKT	1209350-09	2
	1	TRANSFORMER	1611533	1
		DESCRIPTION	DWG. PART NO.	ITEM NO.

UNLESS OTHERWISE SPECIFIED DIMENSIONS ARE IN MILLIMETERS

SYMBOL	CLASS OF ACCURACY (CHECK ONE)	NOMINAL DIMENSION RANGE MILLIMETER OVER 1 TO 5	OVER 5 TO 30	OVER 30 TO 100	OVER 100 TO 300	OVER 300 TO 1000	OVER 1000 TO 2000
ANGLES ±0°30' SURFACE QUALITY IN MICROINCHES	MEDIUM ☐	±0.1	±0.2	±0.3	±0.4	±0.8	±1.0
	PREFERRED ☐	±0.3	±0.4	±0.6	±1.0	±1.6	±2.5

QUANTITY & VARIATION

THIRD ANGLE PROJECTION

REMOVE BURRS AND BREAK SHARP CORNERS

DO NOT SCALE DWG

MATERIAL

FINISH

DRN. [illegible] 4-15-75
CHK'D [illegible] 4-15-75
ENG. [illegible] 4-25-75
PROJ. ENG. [illegible] 4-26-75
PROD. [illegible]

NEXT HIGHER ASSY. 1-A0-7010681-0-0

SCALE 1/1

SHEET 1 OF 1

FIRST USED ON VT50

TITLE HARNESS, TRANSFORMER (50HZ)

SIZE 1 | CODE TA | NUMBER 7011130-0-0 | REV.

DIST.

REVISIONS

REV.	CHANGE NO.	PWK

ECO FORM NO. BM1-150

7011130-0-0

THIS DRAWING AND SPECIFICATIONS, HEREIN ARE THE PROPERTY OF DIGITAL EQUIPMENT CORPORATION AND SHALL NOT BE REPRODUCED OR COPIED OR USED IN WHOLE OR IN PART AS THE BASIS FOR THE MANUFACTURE OR SALE OF ITEMS WITHOUT WRITTEN PERMISSION.
COPYRIGHT © '75 DIGITAL EQUIPMENT CORPORATION

WIRE TABLE

ITEM NO.	DESCRIPTION AWG	COLOR	FROM POINT	FROM CONNECTION	FROM TERM	TO POINT	TO CONNECTION	TO TERM	REMARKS
1	16	BLK		T1-2		1		2&3	
4	18	GRN			5	5	P1-2	6&7	
4	18	GRN			5	4	P1-1		
1 of 17	16	VIO		T1-7		6	P1-4		
		VIO		T1-6		7	P1-5		
		VIO/BLK		T1-1		8	P1-6		
		BLU		T1-5		9	P1-7		
		BLU		T1-3		10	P1-8		
	16	BLU/BLK		T1-4		11	P1-9	6&7	
8	14	BLK	12		9				
11	18	BLK	13		2&3	21		10	
11	18	BLK	4		2&3				
14	18	WHT	15		2&3				
14	18	WHT	16		2&3	20		10	
13	14	WHT	19		9				
11	18	BLK	17		12	18		12	
1 of 17	16	BLK/WHT		T1-8		22		2&3	
	16	WHT		T1-10					
14	18	WHT	24		2&3	23		10	
14	18	WHT	25		2&3				
1 of 17	16	RED/YEL		T1-9		26		15	SEE NOTE #1
	16	RED/YEL		T1-11		27		15	

LEGEND

NUMBER	VARIATION
70111-31-0	220/240 VOLTS
70111-31-1	100/127 VOLTS

NOTES:
1. POINTS 26 & 27 ARE NOT USED AT PRESENT TIME, COIL WIRES AND HOLD IN PLACE WITH CABLE TIE (ITEM #6). SHRINK TUBING (ITEM #5) TO BE USED AT END OF WIRES.

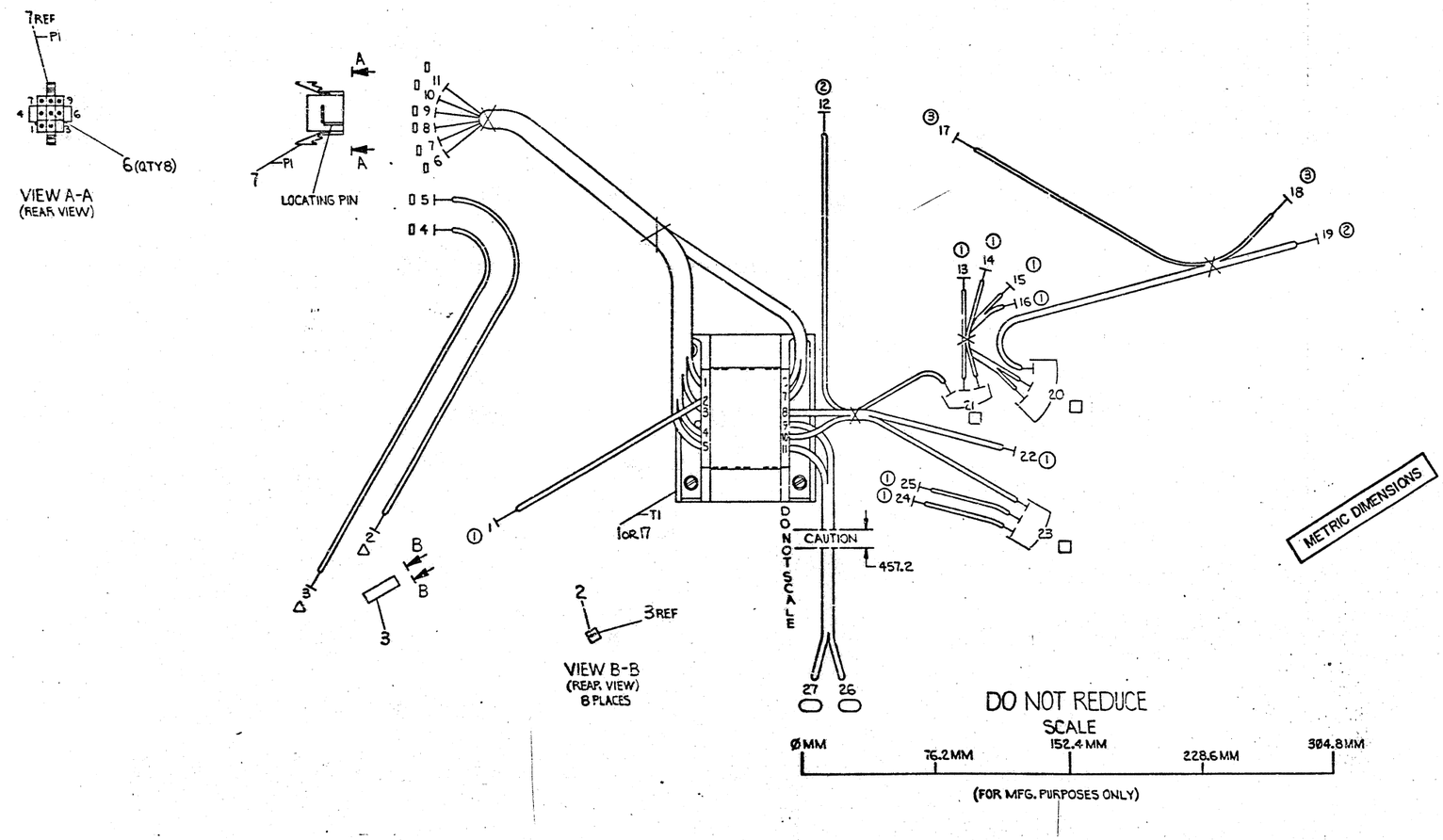

ITEM	QTY		DESCRIPTION		DIGITAL PART NO.	
	1	-	XFMR, 100/127V		12-12133	17
✱	G	G	TIE CABLE		9007291	16
○	A/R	A/R	SHRINK TUBING	(WHT)	9107951-09	15
	A/R	A/R	WIRE, #18 AWG STRD	(WHT)	9107360-09	4
	A/R	A/R	WIRE, #14 AWG STRD	(WHT)	9107370-09	13
③	2	2	TERM, QUICK CONNECT		9007917	12
	A/R	A/R	WIRE, #18 AWG STRD	(BLK)	9107360-00	1
□	3	3	SPLICE, WIRE	18-10 AWG	9007295	2
②	2	2	TERM, QUICK CONNECT		9007919	9
	A/R	A/R	WIRE, #18 AWG STRD	BLK)	9107360-00	6
	1	1	CONN, 2 SKT - HOUSING		12091350-09	7
▯	8	8	CONN, SKT		2389179-00	8
△	2	2	TERM, RING		9007993-00	5
	A/R	A/R	WIRE, #18 AWG STRD	(GRN)	9107360-05	4
	E	E	HOUSING, FASTAB SKT		9-0820-*	3
①	8	8	TERM, MINI FASTAB		9-2820-2*	2
	1	1	XFMR, 220/240/VOLTS		9-12059-00	

DESIGNATION — DWG PART NO.

UNLESS OTHERWISE SPECIFIED DIMENSIONS ARE IN MILLIMETERS

	CLASS OF ACCURACY (CHECK ONE)	NOMINAL SIZE				ABSOLUTE TOLERANCE ±			
ANGLES 10' 30'		UP TO 6	OVER 6 TO 30	OVER 30 TO 120	OVER 120 TO 315	UP TO 6	OVER 6 TO 30	OVER 30 TO 120	OVER 120 TO 315
SURFACE QUALITY 125									
MICROINCHES	MEDIUM ☐ 125	.02	.03	.04	.06				
	PREFINISHED ☐ 250	.04	.05	.06	.08				

QUANTITY & VARIATION

3 PLACE ± .5
2 PLACE ± 1.0
1 PLACE ± 2.0

THIRD ANGLE PROJECTION	DRN	FIRST USED ON: VT52
REMOVE BURRS AND BREAK SHARP CORNERS	CHK'D	digital
	ENG	TITLE: HARNESS, TRANSFORMER 50-E
	PROJ ENG	
DO NOT SCALE DWG	PROD	NEXT HIGHER ASSY.
MATERIAL: SEE PARTS LIST		1-13-70108B1-0-0
FINISH		SCALE 1/1
		SHEET 1 OF

SIZE CODE: Ø | IA — NUMBER: 70131-0-0 — REV.

REVISIONS: REV. | CHANGE NO. | DATE

BEC FORM NO. 940 313

"THIS DRAWING AND SPECIFICATIONS, HEREIN, ARE THE PROPERTY OF DIGITAL EQUIPMENT CORPORATION AND SHALL NOT BE REPRODUCED OR COPIED OR USED IN WHOLE OR IN PART AS THE BASIS FOR THE MANUFACTURE OR SALE OF ITEMS WITHOUT WRITTEN PERMISSION.
COPYRIGHT ©1975, DIGITAL EQUIPMENT CORPORATION"

LEGEND

PART NO.	VARIATION	"A" REF	"B" REF	"C" REF	"D" REF
7413407-1-0	115 VAC	3.0	14.0	—	—
7413407-2-0	220VAC-240VAC	3.3	8.6	3.3	8.1
7413407-3-0	100VAC-127VAC	3.3	8.4	3.3	10.4

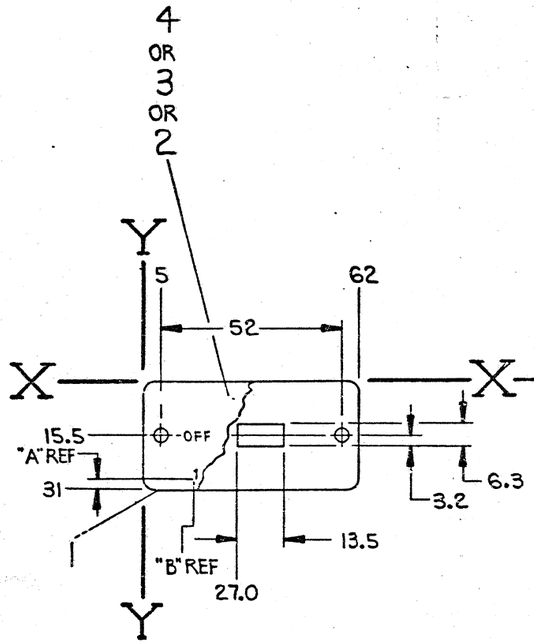

FRONT VIEW

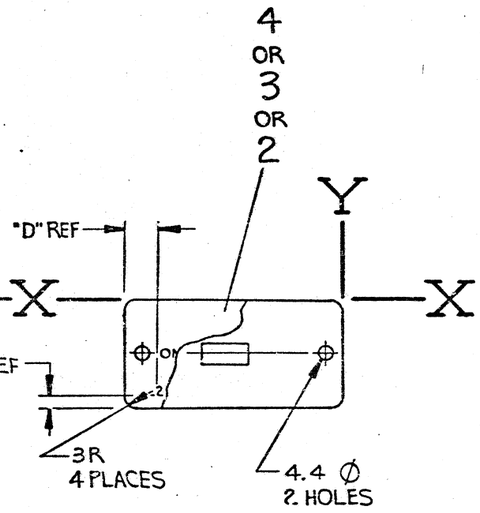

BACK VIEW

METRIC DIMENSIONS

REVISIONS			
	CHANGE NO.		REV.
CHK	7413407-00001		A
S.R.	G. Woods 2-28-75		
	M. MORGANSTERN		
	M. Morganstern		

—	—	—	SILK SCREEN	(LT GRY)	A-SS-7413407-0-3	4
—	1	—	SILK SCREEN	(LT GRY)	A-SS-7413407-0-2	3
—	—	1	SILK SCREEN	(LT GRY)	A-SS-7413407-0-1	2
1	1	1	PLATE			1
7413407-3-0	7413407-2-0	7413407-1-0	DESCRIPTION		DWG./PART NO.	ITEM NO.

QUANTITY & VARIATION

UNLESS OTHERWISE SPECIFIED DIMENSIONS ARE IN MILLIMETERS

ANGLES ±0° 30'	CLASS OF ACCURACY (CHECK ONE)	NOMINAL DIMENSION RANGE MILLIMETER					
		OVER 1 TO 5	OVER 5 TO 30	OVER 30 TO 100	OVER 100 TO 300	OVER 300 TO 1000	OVER 1000 TO 2000
SURFACE QUALITY IN MICROINCHES	MEDIUM ☐	±0.1	±0.2	±0.3	±0.4	±0.5	±1.0
	PREFERRED ☑	±0.3	±0.4	±0.6	±1.0	±1.6	±2.5

THIRD ANGLE PROJECTION

REMOVE BURRS AND BREAK SHARP CORNERS

DO NOT SCALE DWG

MATERIAL .75 THK 5052-H32 ALUM.

FINISH 92C0101-47

DRN. S. Roberts 1-9-75
CHK'D S. Roberts 1-27-5
ENG L. Brookman 1-27-5
PROJ. ENG. [illegible] 1-27-5
PROD [illegible] 1-27-5

NEXT HIGHER ASSY.

SCALE 1/1

SHEET 1 OF 1

FIRST USED ON VT50

digital

TITLE
PLATE, VT50-51
OFF/ON SWITCH

SIZE	CODE	NUMBER	REV.
2	IA	7413407-0-0	A

DIST.

DEC FORM NO. DA2-120

2 IA 7413407-0-0 A

"THIS DRAWING AND SPECIFICATIONS, HEREIN, ARE THE PROPERTY OF DIGITAL EQUIPMENT CORPORATION AND SHALL NOT BE REPRODUCED OR COPIED OR USED IN WHOLE OR IN PART AS THE BASIS FOR THE MANUFACTURE OR SALE OF ITEMS WITHOUT WRITTEN PERMISSION.
COPYRIGHT © 1975 DIGITAL EQUIPMENT CORPORATION"

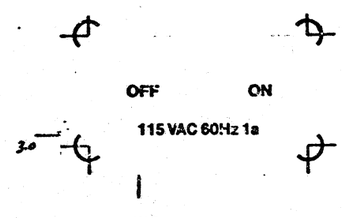

SPEC # 9200101-68 GRAY

REVISIONS		
CHK	CHANGE NO.	REV.
[illegible]	7413407-00001	A
[illegible]	[illegible]	3-5-75

O.K.

INSPECTED BY 27 MI.

DATE 1-15-75

DRN. [illegible]	1-14-75	FIRST USED ON UT50 — digital
CHK'D [illegible]	1-27-75	
ENG. [illegible]	1-27-75	TITLE Switch PLATE UT50 - AA
PROJ. ENG. [illegible]	[illegible]	
PROD. [illegible]	1-27-75	
NEXT HIGHER ASSY.		
SCALE		SIZE A · CODE SS · NUMBER 7413407-0-1 · REV. A
SHEET OF		DIST.

"THIS DRAWING AND SPECIFICATIONS HEREIN, ARE THE PROPERTY OF DIGITAL EQUIPMENT CORPORATION AND SHALL NOT BE REPRODUCED OR COPIED OR USED IN WHOLE OR IN PART AS THE BASIS FOR THE MANUFACTURE OR SALE OF ITEMS WITHOUT WRITTEN PERMISSION.
COPYRIGHT © 1975 DIGITAL EQUIPMENT CORPORATION"

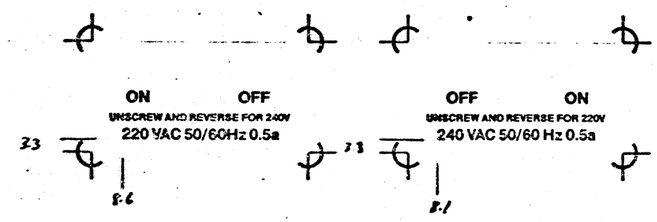

SPEC # 9200101-68 GRAY

REVISIONS		
CHK	CHANGE NO.	REV.
[illegible]	7413407-00001	A

O.K.
AMT. TO STOCK .....
INSPECTED BY .....
DATE ...1/8/75
PART # DEC-3-(447)-1469-M72

DRN. S. Demers	1-14-75	FIRST USED ON VT50	digital
CHK'D [illegible]	1-27-75		
ENG. [illegible]	1-27-75	TITLE switch PLATE VT50-BA	
PROJ. ENG. [illegible]	[illegible]		
PROD. L Bolooi	1-27-75		
NEXT HIGHER ASSY.			
SCALE		SIZE A / CODE SS / NUMBER 7413407-0-2	REV. A
SHEET OF		DIST.	

"THIS DRAWING AND SPECIFICATIONS, HEREIN, ARE THE PROPERTY OF DIGITAL EQUIPMENT CORPORATION AND SHALL NOT BE REPRODUCED OR COPIED OR USED IN WHOLE OR IN PART AS THE BASIS FOR THE MANUFACTURE OR SALE OF ITEMS WITHOUT WRITTEN PERMISSION.
COPYRIGHT © 1975 DIGITAL EQUIPMENT CORPORATION"

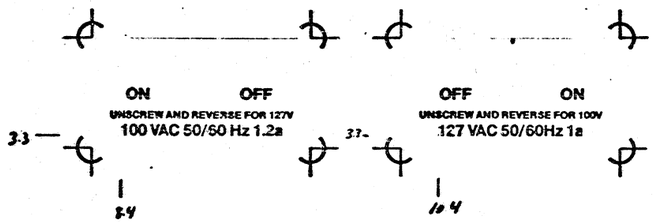

REVISIONS		
CHK	CHANGE NO.	REV.
[illegible]	7413407-00001	A
	L Demers 3-5-75	
	[illegible]	

O.K.
AMT. TO STOCK
INSPECTED BY
DATE 1/21/75
PART # DEC-3-(4442)-1469-N172

SPEC # 9200101-68 GRAY

DRN. L Demers	1-14-75	FIRST USED ON VT50	digital
CHK'D [illegible]	1-27-75		
ENG. [illegible]	1-27-75	TITLE SWITCH PLATE VT50-CA	
PROJ. ENG. [illegible]	1-27-75		
PROD. L Bahnsen	1-27-75		
NEXT HIGHER ASSY.			
		SIZE A / CODE 55 / NUMBER 7413407-0-3	REV. A
SCALE			
SHEET OF		DIST.	

This drawing and specifications, herein, are the property of Digital Equipment Corporation and shall not be reproduced or copied or used in whole or in part as the basis for the manufacture or sale of items without written permission. ©1974

DIGITAL EQUIPMENT CORPORATION
MAYNARD, MASSACHUSETTS

ENGINEERING SPECIFICATION

DATE 12/16/74

TITLE VT50 ENGINEERING SPECIFICATION

REVISIONS

REV	DESCRIPTION	CHG NO	ORIG	DATE	APPD BY	DATE
A	ECO CHANGE	VT50-00002	MORGANSTERN	3-75	[illegible]	3-25-75
B	ECO CHANGE	VT50-00007	BUZYNSKI	4-75	[illegible]	4-29-75

1.0 General

This document specifies the level of performance the end-user can expect from the VT50.

For the purposes of this specification, the VT50 Programmer's and Operator's Manuals are included as part of this specification.

VT50 Programmer's Manual DEC-00-0VT5A-A-D

VT50 Operator's Manual DEC-00-0VT0A-A-D

ENG.	APPD	SIZE	CODE	NUMBER	REV
[illegible] Morganstern	[illegible]	A	SP	VT50-0-1	B

DEC 16-(393)-1079-0971
DRA 107

ENGINEERING SPECIFICATION — CONTINUATION SHEET

TITLE VT50 ENGINEERING SPECIFICATION

20 OVERALL SPECIFICATIONS

CHARACTERISTIC	DESCRIPTION
DIMENSIONS Height Width Depth Minimum Table Depth	 360mm (14.1 in.) 53 mm (20.9 in.) 690mm (27.2 in.) 450mm (17.7 in.)
WEIGHT	20kg (44 lbs.)
OPERATING ENVIRONMENT	DEC STD 102 Class B environment
Temperature Humidity	10°C to 40°C (50°F to 104°F) 20% to 80% with: Maximum wet bulb 25°C (77°F) Minimum dew point 2°C (36°F)
LINE VOLTAGE	U.S. model: 100-126V (115V nominal) European model: 191-238V or 209-260V (220/240V nominal switch selectable)
LINE FREQUENCY	U.S. model: 60±1 Hz European model: 60±1 Hz or 50±1 Hz
POWER LINE HASH FILTER	Low leakage - BALUN type
DISPLAY FORMAT Character Type Character Size Screen Size Active Screen Size	 12 lines of 80 characters 5X7 dot matrix (foreign character fonts; 5X8 when available) 2.0mm X 4.0mm (.08" X .16") 12" diagonal (305mm) rectangular 210mm X 105mm (8.3" X 4.1")
CHARACTER SET	64 character upper case ASCII 32 control codes
KEY LAYOUT	Typewriter rather than keypunch format
KEYCLICK	Audible sound simulates typewriter feel. Switch Disable for quiet environments.

SIZE	CODE	NUMBER	REV
A	SP	VT50-0-1	B

DEC FORM NO DEC 16-(381)-1022-N370
DRA 108

SHEET 2 OF 14

ENGINEERING SPECIFICATION — CONTINUATION SHEET

TITLE VT50 ENGINEERING SPECIFICATION

CHARACTERISTIC	DESCRIPTION
BELL	Audible alarm sounds when Control G is received and on the 73rd character of a line when keyboard data is being entered.
TERMINAL MODES	Local Mode Remote Mode: Full Duplex or Full Duplex with Local Copy
PAGE OVERFLOW	Upward scroll
PARITY	Even or mark (no parity) switch selectable Odd or space possible with rewiring
CURSOR Type Control	 Blinking underline Up or down one line; right or left one character; home; tab; erase display from cursor position to end of line; erase to end of screen
HOLD SCREEN MODE	Allows operator to halt transmission from host, preserving data on display. Enabled; disabled by Escape sequences sent by system software or keyboard
COMMUNICATIONS Code Speed	20ma current loop standard; EIA interface optional U.S. ASCII extended through Escape Sequences Switch Selectable - Full Duplex: 75, 110, 150, 300, 600, 1200, 2400, 4800 and 9600 baud Full Duplex With Local Copy: 110, 600, 1200, 2400, 4800, 9600 baud (75, 150, 300 are not available in this mode without machine modification) Full Duplex Split Speeds: Transmission at 75, 150, 300 baud with reception at 600, 1200, 2400, 4800, 9600 baud

SIZE	CODE	NUMBER	REV
A	SP	VT50-0-1	B

DEC FORM NO DEC 16-(381)-1022-N370
DRA 108

SHEET 3 OF 14

ENGINEERING SPECIFICATION — CONTINUATION SHEET

TITLE VT50 ENGINEERING SPECIFICATION

CHARACTERISTIC	DESCRIPTION
OPERATOR CONTROLS	Power ON/OFF, Intensity Control, Baud Rate Switch, Terminal Mode Switch, Key-Click ON/OFF, Even/No Parity
OVERLOAD PROTECTION	Thermal switch
POWER CONSUMPTION	110 watts
PLASTIC CASE MATERIAL	Expansion cast ABS or Injection Molded NORYL
PHOSPHOR	P4
BAUD RATE SELECTION	Switches on underside of unit
TRANSMISSION CODE	8 bit ASCII(U.S.)
TRANSMISSION CODE LENGTH 10 bit 11 bit	 75,150,300,600,1200,2400,4800,9600 110 baud only
PARITY	Generated on transmission as ever parity or a mark (switch selectable) Parity is not checked on reception.
INTERNAL DATA HANDLING	TTL Microprocessor and UART
DISPLAY MEMORY	MOS STATIC RAM
VIDEO	Raster scan. Roll free. No need for horizontal hold and vertical hold adjustments.
CHARACTER GENERATION	MOS ROM (Signetics 2513 or equivalent)
ERASE FUNCTIONS	Erase from cursor to End-of-Line (ESC K-033,113) Erase from cursor to End-of-Screen (ESC J-033,112)
STRAPPING OPTIONS	Odd parity, parity bit = space, 60Hz 220/240V
CURSOR CONTROLS	Cursor Up...ESC A(033,101) Backspace...(010)

SIZE	CODE	NUMBER	REV
A	SP	VT50-0-1	B

DEC FORM NO DEC 16-(381)-1022-N370
DRA 108

SHEET 4 OF 14

CHARACTERISTIC	DESCRIPTION
	Cursor Right...ESC C(033,103) Home.....ESC H Line Feed.....(012) Tab.....(011)
OPERATOR CONTROLS Right Side Rear Bottom	Power ON/OFF voltage select Brightness control(slide control) Baud rates, full duplex, local, full duplex with local copy. Keyclick switch, EIA switch (EIA card optional). Parity/No Parity switch
BREAK KEY	When pressed, a 250 millesecond (approx) one shot signal is transmitted
INTERNAL POWER SUPPLY (these include reserve power specified below)	Overcurrent protected +5 @ 4.5 amps +15 @ 1.65 amp peak, 1.45 amps avg. -12 @ 500ma avg., 650ma peak -5 @ 15ma
Reserve power for interface options such as EIA card, special DF11 options, etc.	+5 @ 250ma -12 @ 125ma +15 @ 250ma
INTERNAL TIMING SOURCE	Crystal oscillator 13.824MHz ± .1%
CHARACTER SPACING	5 dots, 4 spaces to generate well separated easy-to-read characters
MONITOR ELECTRONICS	100% solid state
GEOMETRIC DISTORTION	The perimeter of a full field of characters shall approach an ideal rectangle to within ±4% of the rectangle height
INTERNAL SET-UP CONTROLS (access limited)	Vertical height, Vertical Linearity, Horizontal Size, Focus, Test Pattern Switch

CHARACTERISTIC	DESCRIPTION
UL APPROVAL	Units with serial numbers in excess of _____, shall have Underwriter's approval. Units lacking UL stickers shall be assumed not to have UL approval.
TAB	When TAB (011) is received by the terminal, the cursor is moved to the next tab stop. Tab stops are set every 8 spaces to the 73rd character position, TAB moves the cursor one position to the right.

VT50 H - (VT50 with direct cursor addressing and 18-key numeric pad).

The VT50 H has all of the above VT50 specifications plus the following additional features.

BLANK (A)	BLANK (B)	BLANK (C)	↑
7	8	9	↓
4	5	6	→
1	2	3	←
Ø		.	ENTER

Key Legend	Code Transmitted	Function
.	$Ø56_8$	Period
Ø thru 9	$Ø6Ø_8$ thru $Ø71_8$	Numerics Ø thru 9
ENTER	$Ø15_8$	CR - used to delimit data fields.
↑	ESC A	Moves the cursor position up one line.
↓	ESC B	Moves the cursor position down one line.
→	ESC C	Moves the cursor position to the right one character.
←	ESC D	Moves the cursor position to the left one character position.
BLANK (A)	ESC P	Blank keys may be used to implement user functions
BLANK (B)	ESC Q	
BLANK (C)	ESC R	

DIRECT CURSOR ADDRESSING

Direct Cursor Addressing can be invoked in the VT50H and VT50J by two separate commands.

The two commands are:

1) CNTL N (CAD 16 (8)) "Line" "Column"

Through the use of CAD 016 (8), the cursor can be directed to any of the 960 character locations in the CRT screen using three instructions. When the CAD-code is received by the VT50H, it causes the firmware to escape from its normal mode of operation.

2) ESC "Y" "Line" "Column"

Through the use of ESC "Y", the cursor can be directed to any of the 960 character locations on the CRT screen using three instructions. When the ESC-code is received by the VT50H, it causes the firmware to escape from its normal mode of operation.

The next two data words are interpreted as the Y- and X- address in that order. The Y-data word presents the Y-address counter to the selected character line, and the X-data word presents the X-address counter to the selected character position in the selected line. Once the cursor is moved to the new location (or address), the cycle is complete and the next data word received, will perform its normal function.

The Y- and X- addresses are determined by subtracting 40 (8), from the received data, and using the result as the new cursor-position. If the Y-address is greater than 13 (8), the cursor will be postioned on the last line. If the X-address is greater than 117 (8), the cursor will be positioned in the last column.

Control codes and escape-sequences do not interfere with the execution of a direct cursor addressing sequence.

All of the following specifications also apply to the VT50H

3.0 20ma CURRENT LOOP SPECIFICATION:

CHARACTERISTIC	DESCRIPTION	
TRANSMITTER	Passive, isolated, goes to the mark state when power is turned off	
Open Circuit Voltage (of the current being driven)	MIN 5.)	MAX 25V
Voltage Drop Marking	.5V	4.0V
Spacing Current	.4ma	2.0ma
Marking Current	20ma	----
RECEIVER	Passive, isolated	
Voltage Drop Marking	.8V	2.5V
Spacing Current	0.0ma	3.0ma
Marking Current	15ma	30ma

3.1 20ma LOOP TERMINAL STRIP
Six 8/32 Screw Terminals
Numerals appear on the terminal strip phenolic.

CHARACTERISTIC	DESCRIPTION	
SCREW 1	15 volts open circuit, output impedance 500 ohms (used for self-test only)	
SCREW 2	Transmit Positive	Tx+
SCREW 3	Transmit Negative	Tx-
SCREW 4	Receive Positive	Rx+
SCREW 5	Receive Negative	Rx-
SCREW 6	Ground (used for self-test only)	

Self-test is achieved by jumpering 1-2, 3-4, 5-6, and putting the terminal in full duplex.

3.2 CABLE FOR 20ma LOOP

A cable is supplied with an 8 pin Mate-N-Lok connector for connection to DEC computers. The plug may be cut off and changed as desired. The cable installs under the screw terminals of the terminal strip.

CHARACTERISTIC	DESCRIPTION
CABLE LENGTH	4 meters
CABLE TYPE	4 wires #22 AWG stranded
CONNECTOR HOUSING TYPE	DEC P/N 12-09340-01 AMP 1-480460
CONNECTOR PIN TYPE (4 req'd)	DEC P/N 12-09378-03 AMP 350079-4
CONNECTOR MATES WITH:	DEC P/N 12-09340-00 AMP 1-480459
FEMALE PINS (4 req'd)	DEC P/N 12-09379-03 AMP 350078-4
SIGNAL = TRANSMIT POSITIVE	Terminal screw = #2 Wire color = green Mate-N-Lok pin = #7
SIGNAL = TRANSMIT NEGATIVE	Terminal screw = #3 Wire color = red Mate-N-Lok pin = #3
SIGNAL = RECEIVE POSITIVE	Terminal screw = #4 Wire color = white Mate-N-Lok pin = #5
SIGNAL = RECEIVE NEGATIVE	Terminal screw = #5 Wire color = black Mate-N-Lok pin = #2

Jumpering terminal 3 to terminal 4 allows 2 wire half-duplex operation.

3.3 BAUD RATES VS. DISTANCE FOR INTEGRAL 20ma LOOP
Greater than 100 feet at any baud rate when connected to an M596

Greater than 1000 feet at any baud rate when connected to an M5960

4.0 EIA CARD SPECIFICATIONS

The EIA card is an extra cost option consisting of a customer installable cable assembly. The cable has 2 chips which convert to EIA levels.

CHARACTERISTIC	DESCRIPTION
LENGTH OF CABLE	4 meters
CONNECTOR	Cannon DB 19604-432 or equivalent Male 25 position connector
EIA PIN #1	Signal: protective ground Comment: Logic 1 = off = -10V
EIA PIN #2	Signal: transmitted data Comment: Logic 0 = on +10V
EIA PIN #3	Signal: received data Comment: Logic 1 = off - -5 to 25V Logic 0 = on +5 to 25V
EIA PIN #4	Signal: request to send Comment: wired true (+10V)
EIA PIN #7	Signal ground
EIA PIN #20	Signal: data terminal ready Comment: wired true (+10V)
ALL OTHERS	No connection

The VT50 meets RS-232C by using the Motorola MC 1488 RS-232C line driver and MC 1489 RS0232C line receiver.

The EIA card is a customer installed option.

5.0 EIA CARD INTERNAL CONNECTIONS

The EIA card is supported by two rows of straight pins which accept AMP CIS Top Entry connectors (AMP P/N 6-380950-0) or AMP cable housing (AMP P/N 1-350092-0 with contacts 350090-1) for cable connection to custom interfaces. One row of pins is only for card support. Signals available on the other row are:

CHARACTERISTIC	DESCRIPTION
PIN #1	Signal name: +5V @ 250ma
PIN #2	Signal name: -12V @ 125ma
PIN #3	Signal name: +15V @ 250ma
PIN #4	Ground
PIN #5	TTL received data
PIN #6	TTL transmitted data

6.0 INITIALIZING

Powering up the unit causes the VT50 to initialize. The power ON/OFF switch on the right side of the VT50 is recommended for initialization.

Initialization causes the entire screen to be cleared and cursor moved to the home position (upper left hand corner).

Initialization on some VT50's may be achieved by holding the control key down then pressing and releasing the break key. It is anticipated that this feature will be deleted at some later date as the initialize function is achieved by the power switch.

7.0 BREAK KEY

Depressing the break key forces the serial line to a space condition (zero current) for .15 to .40 seconds (.25 sec. nominal). This feature is provided for users with software written to operate in Half-Duplex.

CAUTION: THE BREAK KEY FUNCTIONS EVEN IN LOCAL MODE!

8.0 TV PICTURE QUALITY

The character resolution shall not vary markedly across the screen nor shall there be excessive pin-cushion nor excessive barrel distortion. What is acceptable shall be that which is acceptable to the untrained observer such as a clerk typist. The picture must be clear, easy to read and free of visual defects that impair readability.

The horizontal centering shall be such that the distance of the left hand character on the sixth line from the left screen boundary is within 13mm (½") of the distance from the right most character on the sixth line to the right screen boundary.

The vertical centering shall be such that the distance of the top screen edge to the 40th character on line 1 shall be within 13mm (½") of the distance of the bottom screen edge to the 40th character on the twelfth line.

The screen image shall appear parallel to the table surface.

This drawing and specifications, herein, are the property of Digital Equipment Corporation and shall not be reproduced or copied in whole or in part as the basis for the manufacture or sale of items without written permission.

DIGITAL EQUIPMENT CORPORATION
MAYNARD, MASSACHUSETTS

ENGINEERING SPECIFICATION

DATE 12/23/74

TITLE VT5Ø ACCEPTANCE TEST

REVISIONS

REV	DESCRIPTION	CHG NO	ORIG	DATE	APPD BY	DATE
A	ECO CHANGE	V150-00003	MORGANSTERN	3-75	[illegible]	3-25-75
B	REPLACED SHT'S 2 & 3	V150-00008	BUZYNSKI	4-75	[illegible]	4-28-75

Upon removal from shipping container, inspect for physical damage, then make the following checks before connecting your VT5Ø terminal to system:

1) LOCAL MODE CHECK:
Set terminal, using a screwdriver or small coin, to "Local Mode" and "9600" baud as shown on label mounted to underside of terminal. Plug terminal into line, move the ON/OFF slide switch located on the right side of terminal to the ON position.

After a one minute warm-up period, a flashing cursor should appear on the screen. If nothing is seen or display is too bright, reach over and adjust the intensity control on the rear of the terminal at the top right hand corner. Control moves to the right for increased brightness.

Check for terminal to display characters as keys are depressed.

2) REMOTE MODE CHECK - FULL DUPLEX:
Set terminal for full-duplex operation, locate terminal strip, with screws numbered 1 through 6 on underside, jumper 1 and 2 together, then 3 and 4, and finally 5 and 6. Use any wire for jumpers.

The terminal should now display characters as keys are depressed.

ENG	APPD	SIZE	CODE	NUMBER	REV
[signature]	[signature]	A	SP	VT 50-0-2	B

DEC 16-(392)-0079-N971
DRA 107

ENGINEERING SPECIFICATION — CONTINUATION SHEET

TITLE VT50 ACCEPTANCE TEST

3) HALF-DUPLEX, ESCAPE AND CONTROL COMMAND CHECKS:
Remove jumpers 1 and 2, and 3 and 4, then add a jumper from 1 to 4 on the terminal strip. Set terminal for half-duplex operation, then depress keys and check for corresponding characters on screen.

Erase Functions:
a. Type some characters on all 12 lines
b. With cursor on the bottom line, press "CTRL M;" check for cursor to move to the left-most position on that line.
c. Press "ESC K"; check for all characters on the bottom line to be erased.
d. Press "ESC H"; check for cursor to go to the top left of screen.
e. Press "ESC J"; check for all characters on the screen to be erased.

Move Cursor Functions:

A. All VT50 Models
a. Press "ESC C"; cursor should move to right, repeat until cursor is in the center of screen.
b. Press "CTRL J"; cursor should move down one line.
c. Press "ESC A"; cursor should move up one line.
d. Press "CTRL H"; cursor should move left one position.
e. Press "CTRL I"; cursor should move to the next TAB stop.

B. VT50H, VT50J only (direct cursor addressing and numeric pad)
a. Press "ESC H" on numeric pad; cursor should move to the home position on the screen (1st character on 1st line).
b. Fill the screen with miscellaneous characters.
c. Press "CTRL N" "+" "SPACE"; the cursor should move to the 1st character position on the last (12th) line on the screen.
d. Press "CTRL N" "!"; the cursor should move to the 64th character position of the 2nd line on the screen.
e. Press "CTRL N" "SPACE" "SPACE"; The cursor should move to the home position on the screen.
f. Repeat steps a thru e replacing the "CNTL N" with "ESC Y".

Hold Screen Mode Functions:
a. Place cursor on bottom line
b. Press "ESC ["; Hold Screen Mode
c. Press "LF" key
d. Type "VT5Ø" - check characters do not appear on the screen
e. Press "SCROLL" key - the message "VT5Ø" should now appear on the screen
f. Press "ESC \ "; exit Hold Screen Mode
g. Press "LF" key - check for message to scroll up

Miscellaneous Functions:
a. Press "CTRL G"; check for buzzer to ring
b. Press "ESC Z"; check for the character to appear on the screen.

SIZE	CODE	NUMBER	REV
A	SP	VT50-0-2	B

DEC FORM NO DEC 16-(381)-1022-N370
DRA 108

ENGINEERING SPECIFICATION — CONTINUATION SHEET

TITLE VT50 ACCEPTANCE TEST

as follows:

Terminal	Character displayed on screen
VT50A	A
VT50B	B
VT50H	H
VT50J	H

C.) **Press the "REPEAT" key and the "A" key: the letter A should repeat as long as both keys are down.**

4) ON-LINE ACCEPTANCE TEST
Connect VT5Ø to a PDP-11 computer via a DL11-A/B interface. Load and run the VT5Ø acceptance test program for at lease one pass.

MAINDEC-11-DZVTC- (Latest Revision)

SIZE	CODE	NUMBER	REV
A	SP	VT50-0-2	B

DEC FORM NO DEC 16-(381)-1022-N370
DRA 108

This drawing and specifications, herein, are the property of Digital Equipment Corporation and shall not be reproduced or copied or used in whole or in part as the basis for the manufacture or sale of items without written permission.

DIGITAL EQUIPMENT CORPORATION
MAYNARD, MASSACHUSETTS

ENGINEERING SPECIFICATION

DATE 12-19-74

TITLE VT50 Manufacturing Acceptance Specification

REVISIONS

REV	DESCRIPTION	CHG NO	ORIG	DATE	APPD BY	DATE
*	Original Release	N/A		12-19-74		
A	ADD CRT BLEMISH SPEC.	00009	MORGANSTERN	5-22-75	Morganstern	30 May 75

ENG	APPD	SIZE	CODE	NUMBER	REV
	Morganstern	A	SP	VT50-0-3	A

DEC 16-(392)-1079-N971
DRA 107

ENGINEERING SPECIFICATION — CONTINUATION SHEET

TITLE VT50 Manufacturing Acceptance Specification

1.0 SCOPE:

The purpose of this specification is to set a manufacturing standard to which all VT50's are produced. The specifications set forth in this document are more stringent then the VT50 Engineering specification. This insures DEC, as a manufacturer, that when a customer receive his VT50 it will meet the Engineering Specification.

2.0 TESTING

All VT50's will undergo two stages of testing module test and VT50 system test. Refer to Test Plan/Flow.

2.1 Module Test

All VT50 modules and VT50 option modules (Copier, EIA) will be tested initially by and not be assembled into a VT50 until successfully passing their respective module test.

This will insure that when a VT50 is assembled that each module is at least 90% good.

2.2 VT50 System Testing

All VT50 will under go at least 48 hours of hot/cold cycle testing while being exercised by the VT50 Acceptance Test Program MAINDEC-11-DZVTC-A. The parameters of this testing are stated in Figure 1.

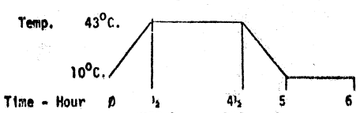

Skeleton burn-in 2 complete cycles.
Final burn-in 6 complete cycles.

FIGURE 1

2.2.1 Vibration Testing

All VT50's will be vibration tested with a full screen of characters.

2.2.2 Keyboard Diagnostic Test

The Keyboard Diagnostic Test will be performed twice

SIZE	CODE	NUMBER	REV
A	SP	VT50-0-3	A

DEC FORM NO DEC 16-(381)-1022-N370
DRA 108

SHEET 2 OF 4

ENGINEERING SPECIFICATION — CONTINUATION SHEET

TITLE VT50 Manufacturing Acceptance Specification

during system testing---before skeleton burn-in and after Vibration Test.

2.2.3. Final Acceptance Test

Final Acceptance Testing is a communication test which tests the ability of a VT50 to communicate over a 20ma serial loop 1000 feet long to another VT50 device at all baud rates.

2.2.4 48 Hour Ambient

All VT50's under go 48 hours of final testing at ambient temperatures while being exercised by the VT50 Acceptance Test Program.

2.2.5 Failures

All failures detected during Module Testing and VT50 System Testing will be repaired in accordance with VT50 Module Repair and Rework Procedure. Failures will not constitute the resetting to zero the time of any of the VT50 system tests except in the case when a module or modules are replaced, and only then if the modules used for replacement have not previously passed the test which the unit failed in.

3.0 VT50 Picture Quality

The VT50 picture quality shall be in conformance with this specification before being shipped.

Active Screen Size:	Vertical	105mm ± 2mm
	Horizontal	210mm ± 2mm
** Character Size:	Vertical	4mm ± .4mm
	Horizontal	2mm ± .4mm
Centering:	Vertical	A difference of no greater than 7mm between the top and bottom margins* at the vertical center of the screen (40th character.).
	Horizontal	A difference of no greater than 7mm between the right and left margins* at the horizontal center of the screen's sixth line.

* The vertical and horizontal margins are the non-displayed area on the CRT between the shell and Active Screen Size.
**Character size dependant on the active screen size.

SIZE	CODE	NUMBER	REV
A	SP	VT50-0-3	A

DEC FORM NO DEC 16-(381)-1022-N370
DRA 108

SHEET 3 OF 4

ENGINEERING SPECIFICATION — CONTINUATION SHEET

TITLE VT50 MANUFACTURING ACCEPTANCE SPECIFICATION

Rotation:		The active screen shall be square within ±5mm of the shell surface above the keyboard as measured between the first character on the 12th line and the shell surface and the 80th character on the 12th line and shell surface.
Pin Cushion Distortion:	Vertical	±2mm at each corner char.
	Horizontal	±1mm at each corner char.
Barrel Distortion:	Vertical	±2mm at each corner char.
	Horizontal	±1mm at each corner char.

3.1 SCREEN BLEMISH CRITERIA

Opaque spots, blisters and defects in the screen and glass.
Size - .025" maximum
Number - 2 maximum, between .010" to .025" with 3" minimum separation. Disregard all under .010".

4.0 PRE-SHIPMENT SETTINGS AND CONNECTIONS

To have consistency on all VT50's shipped the following settings/connections should be made:

Baud Rate	S2-6 9600 baud	Key click	on
Local Remote	S1-1 Local	Parity, no Parity	No Parity
Power ON/OFF	Off	20ma, EIA	20ma

Serial Line Cable connected to the 20ma loop terminal strip.

Terminal 1	NC Tighten Screw
Termianl 2	Green Wire
Terminal 3	Red Wire
Terminal 4	White Wire
Terminal 5	Black Wire
Terminal 6	NC Tighten Screw

SIZE	CODE	NUMBER	REV
A	SP	VT50-0-3	A

DEC FORM NO DEC 16-(381)-1022-N370
DRA 108

SHEET 4 OF 4

"THIS DRAWING AND SPECIFICATIONS, HEREIN, ARE THE PROPERTY OF DIGITAL EQUIPMENT CORPORATION AND SHALL NOT BE REPRODUCED OR COPIED OR USED IN WHOLE OR IN PART AS THE BASIS FOR THE MANUFACTURE OR SALE OF ITEMS WITHOUT WRITTEN PERMISSION
COPYRIGHT © 1975 DIGITAL EQUIPMENT CORPORATION"

WIRE TABLE

ITEM NO	DESCRIPTION AWG	COLOR	FROM POINT	FROM CONNECTION	FROM WITH	TO POINT	TO CONNECTION	TO WITH	WIRE LENGTH
3	18	BLU	1	J4-7	ITEM #2	15	——	TIN	390 MM
3	▲	BLU	2	J4-8	▲	16	——	▲	390 MM
4		BLU/BLK	3	J4-9		11	——		450 MM
5		VIO	4	J4-4		9	——		300 MM
5		VIO	5	J4-5		10	——		300 MM
6		VIO/BLK	6	J4-6		12	——	▼	450 MM
7	▼	GRN	7	J4-1	▼	13	——	TIN	460 MM
7	18	GRN	8	J4-2	ITEM #2	14	——	ITEM #9	500 MM

NOTES:

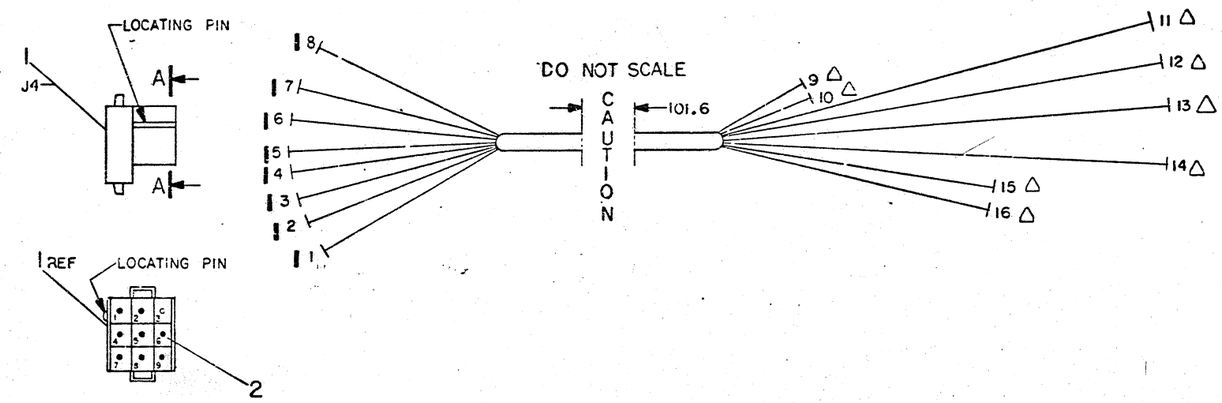

VIEW A A
REAR VIEW
SCALE-:NONE

DO NOT REDUCE

0MM — 152.4MM — 304.8MM

FOR MANUFACTURING PURPOSES ONLY

METRIC DIMENSIONS

△	1	TERMINAL RING (BLUE)	9007927	8
560 MM	A/R	WIRE #18 AWG (GRN)	9107360-55	7
450 MM	A/R	WIRE #18 AWG TRACER (VIO/BLK)	9107410-70	6
600 MM	A/R	WIRE #18 AWG (VIO)	9107360-77	5
450 MM	A/R	WIRE #18 AWG TRACER (BLU/BLK)	9107410-60	4
780 MM	A/R	WIRE #18 AWG (BLUE)	9107360-66	3
▌	9	PIN. (MALE)	1209378-06	2
	1	CONN 9 PIN (MALE)	1209351-09	1
SYM		DESCRIPTION	DWG./PART NO.	ITEM NO.

UNLESS OTHERWISE SPECIFIED DIMENSIONS ARE IN MILLIMETERS

ANGLES ±0° 30'
SURFACE QUALITY IN MICROINCHES
CLASS OF ACCURACY (CHECK ONE)
NOMINAL DIMENSION RANGE MILLIMETER

	OVER 1 TO 5	OVER 5 TO 30	OVER 30 TO 100	OVER 100 TO 300	OVER 300 TO 1000	OVER 1000 TO 2000
MEDIUM	±0.1	±0.2	±0.3	±0.4	±0.6	±1.0
PREFERRED	±0.3	±0.4	±0.6	±1.0	±1.6	±2.5

QUANTITY & VARIATION

THIRD ANGLE PROJECTION

REMOVE BURRS AND BREAK SHARP CORNERS

DO NOT SCALE DWG

MATERIAL SEE PARTS LIST

FINISH

DRN. [illegible]
CHK'D [illegible]
ENG. [illegible]
PROJ. ENG. [illegible]
PROD. [illegible]
NEXT HIGHER ASSY. 1-IA-7011186-0-0
SCALE 1/1
SHEET 1 OF 1

FIRST USED ON VT5Ø

digital

TITLE HARNESS, POWER SUPPLY

SIZE 1 | CODE IA | NUMBER 7011186-0-0 | REV.

DIST.

REVISIONS: CHK | CHANGE NO. | REV.

DEC FORM NO. BN1-150

1 IA 7011186-0-0

"THIS DRAWING AND SPECIFICATIONS, HEREIN, ARE THE PROPERTY OF DIGITAL EQUIPMENT CORPORATION AND SHALL NOT BE REPRODUCED OR COPIED OR USED IN WHOLE OR IN PART AS THE BASIS FOR THE MANUFACTURE OR SALE OF ITEMS WITHOUT WRITTEN PERMISSION.
COPYRIGHT © 1975 DIGITAL EQUIPMENT CORPORATION"

WIRE TABLE

ITEM NO	DESCRIPTION AWG	COLOR	FROM POINT	FROM CONNECTION	FROM WITH	TO POINT	TO CONNECTION	TO WITH	WIRE LENGTH
5	22 TWP	BLUE	1	J1-2	ITEM #2	6	——	TIN	200 MM
		WHITE	2	J1-5		7	——		200MM
3	19	GREEN	3	J1-4		10	——		250 MM
4	22 TWP	RED	4	J1-6		9	——		360 MM
		BLACK	5	J1-3	ITEM #2	9	——	TIN	330 MM

NOTES:

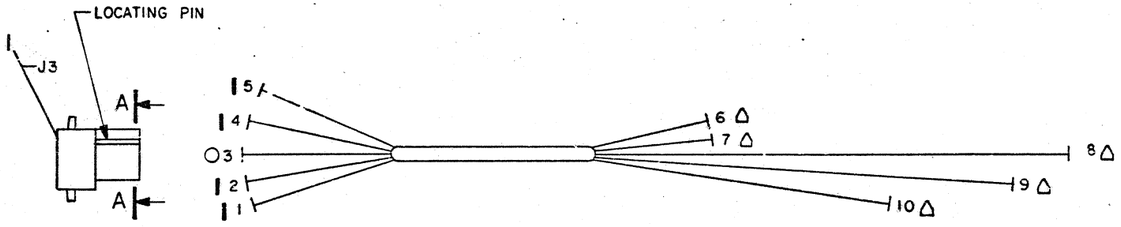

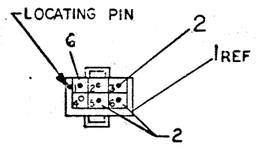

VIEW A-A
REAR VIEW
SCALE : NONE

DO NOT REDUCE

0 MM — 152.4 MM — 304.8 MM

FOR MANUFACTURING PURPOSES ONLY

METRIC DIMENSIONS

○	1	PIN (MALE)	1209378-0-0	6
200 MM	A/R	WIRE #22 AWG TWP (BLUE/WHT)	9107420 -69	5
360 MM	A/R	WIRE #22 AWG TWP (BLK/RED)	9107470 -02	4
280 MM	A/R	WIRE #19 AWG (GRN)	9107360-55	3
1	4	PIN (MALE)	1209378-03	2
	1	CONN 6 PIN (MALE)	1209351-06	1
SYM		DESCRIPTION	DWG. PART NO.	ITEM NO

UNLESS OTHERWISE SPECIFIED DIMENSIONS ARE IN MILLIMETERS

ANGLES ±0°30'	CLASS OF ACCURACY (CHECK ONE)	NOMINAL DIMENSION RANGE MILLIMETER: OVER 1 TO 6	OVER 6 TO 30	OVER 30 TO 100	OVER 100 TO 300	OVER 300 TO 1000	OVER 1000 TO 2000
SURFACE QUALITY IN MICROINCHES	MEDIUM ☐	±0.1	±0.2	±0.3	±0.4	±0.6	±1.0
	PREFERRED ☐	±0.3	±0.4	±0.6	±1.0	±1.6	±2.5

QUANTITY & VARIATION

THIRD ANGLE PROJECTION

DRAWING FOR THE ALIGNER — FIRST USED ON VT5Ø

CHK'D M.J. Wall/Alchin

ENGR [illegible]

PROJ. ENG'R [illegible]

PROD. [illegible]

REMOVE BURRS AND BREAK SHARP CORNERS

DO NOT SCALE DWG

NEXT HIGHER ASSY. 1A-7011220-0-0

MATERIAL SEE PARTS LIST

FINISH

TITLE: HARNESS, YOKE

SIZE 1 | CODE 1A | NUMBER 7011187-0-0 | REV. A

SCALE 1/1

SHEET 1 OF 1 | DIST.

REVISIONS	CHANGE NO.	REV.
CHK	70111187-00001	A

M. MORGANSTERN 2-20-75

DEC FORM NO. 6141-1/30

7011187-0-0 A 1 1A 2

"THIS DRAWING AND SPECIFICATIONS, HEREIN, ARE THE PROPERTY OF DIGITAL EQUIPMENT CORPORATION AND SHALL NOT BE REPRODUCED OR COPIED OR USED IN WHOLE OR IN PART AS THE BASIS FOR THE MANUFACTURE OR SALE OF ITEMS WITHOUT WRITTEN PERMISSION.
COPYRIGHT © 1975 DIGITAL EQUIPMENT CORPORATION"

NOTES :

1. REWORK FROM PURCHASE SPEC. DWG. C-PS-1212127-0-0
2. CUT BLACK WIRE 38.1 MM FROM PIN 4 CONNECTION AND STRIP INSULATION BACK 6.3MM USE WIRE (ITEM #3) CUT INSULATION BACK 6.3MM ON BOTH ENDS AND CONNECT ONE END OF EACH WIRE TO TERMINAL (ITEM #2) AS SHOWN.

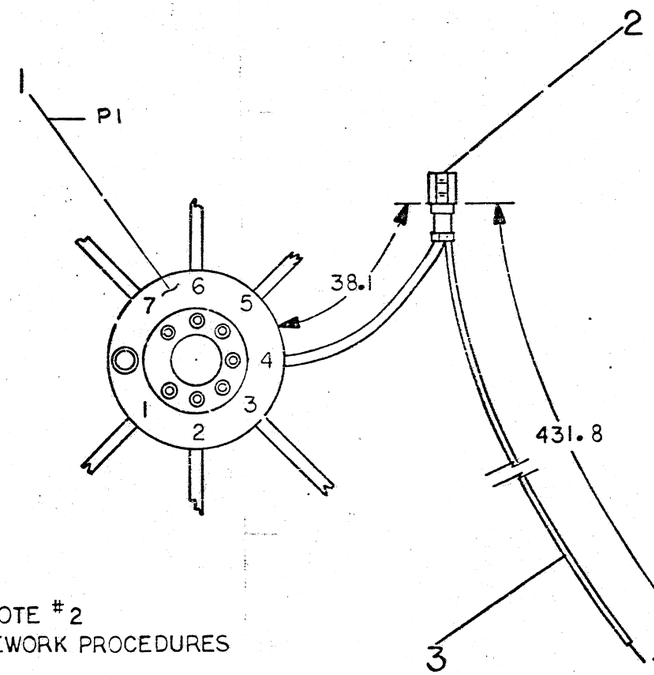

SEE NOTE #2
FOR REWORK PROCEDURES

METRIC DIMENSIONS

431 MM	WIRE #22 AWG STRD (BLK)	9107350-00	3
1	TERMINAL QUICK CONNECT	9007970	2
1	HARNESS CRT	C-PS-1212127-0-0	1
	DESCRIPTION	DWG./PART NO.	ITEM NO.

UNLESS OTHERWISE SPECIFIED DIMENSIONS ARE IN MILLIMETERS

ANGLES ±0° 30'	CLASS OF ACCURACY (CHECK ONE)	NOMINAL DIMENSION RANGE MILLIMETER					
		OVER 1 TO 5	OVER 5 TO 30	OVER 30 TO 100	OVER 100 TO 300	OVER 300 TO 1000	OVER 1000 TO 2000
SURFACE QUALITY IN ✓ MICROINCHES	MEDIUM ☐	±0.1	±0.2	±0.3	±0.4	±0.6	±1.0
	PREFERRED ☐	±0.3	±0.4	±0.6	±1.0	±1.6	±2.5

QUANTITY & VARIATION

THIRD ANGLE PROJECTION

REMOVE BURRS AND BREAK SHARP CORNERS

DO NOT SCALE DWG

MATERIAL SEE PARTS LIST

FINISH

DRN George Brown 5/15/75
CHK'D
ENG. 5/21/75
PROJ. ENG.
PROD.

NEXT HIGHER ASSY. I-IA-7011220-0-0

SCALE NONE

SHEET 1 OF 1

FIRST USED ON VT50

digital

TITLE HARNESS, CRT REWORK

SIZE	CODE	NUMBER	REV.
2	IA	7413948-0-0	

DIST.

REVISIONS	REV.	CHANGE NO.	CHK

DEC FORM NO. DA2-12C

7413948-0-0 IA 2 B

"THIS DRAWING AND SPECIFICATIONS, HEREIN, ARE THE PROPERTY OF DIGITAL EQUIPMENT CORPORATION AND SHALL NOT BE REPRODUCED OR COPIED OR USED IN WHOLE OR IN PART AS THE BASIS FOR THE MANUFACTURE OR SALE OF ITEMS WITHOUT WRITTEN PERMISSION.
COPYRIGHT © 1974, DIGITAL EQUIPMENT CORPORATION"

NOTES:

1. THERE IS NO ETCH BETWEEN T1 AND D33
2. ETCH & PUNCH/DRILL FOR T05 AND T022¢
3. CURRENT LOOP 4 INCH LENGTH 22 AWG WIRE
4. ~~ETCH BUT DO NOT INSERT~~
5. ▽ MUST BE CONNECTED TO A POINT GROUND
6. ECO #5 IS IMPLEMENTED ONLY ON BOARDS WHERE FOCUSING IS A PROBLEM.

LEGEND	
VARIATION	DESCRIPTION
5410886-0-0	BASIC VT50
5410886-1-0	HEAT CYCLED, SYSTEM TESTED 5410886-0

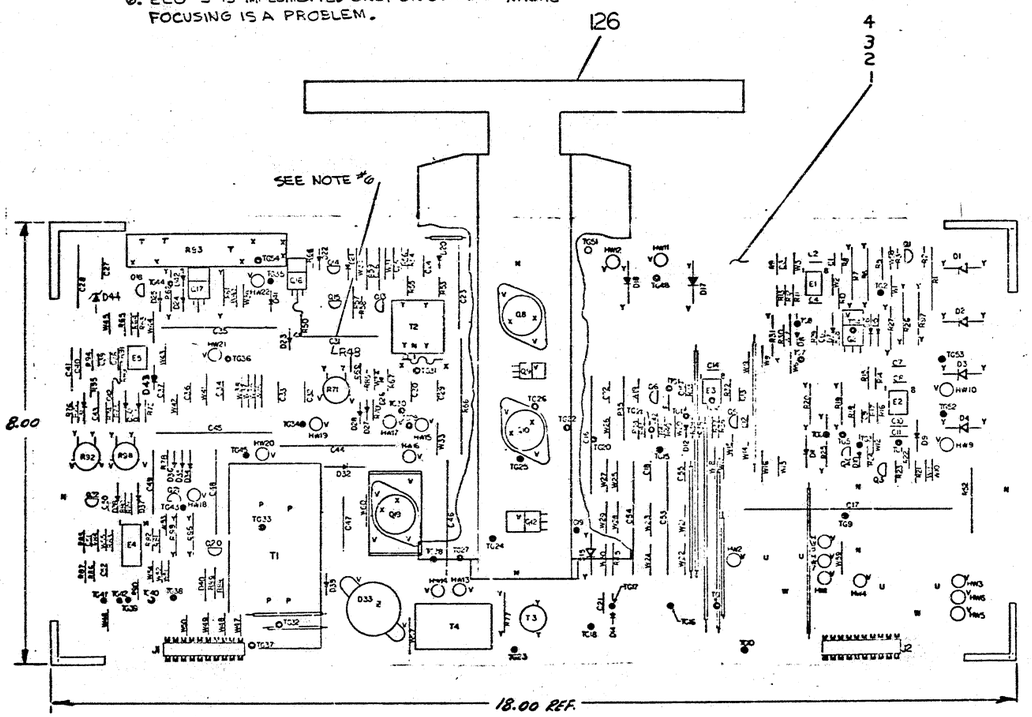

REF				
		X-Y COORDINATE HOLE LOCATION	K-CO-5410886-0-4	1
		ASSY/DRILLING HOLE LAYOUT	D-AH-5410886-0-5	2
		MODULE ECO HISTORY	B-MH-5410886-0-6	3
1		ETCH CIRCUIT BOARD	5010885	4
2	C50,52	CAP 100 PF 100V 5% DM	1000016	5
2	C9,38	CAP 470 PF 100V 5% DM	1000024	6
2	C25,40	CAP .33 UF 20V 10% S.TANT	1005328	7
1	C41	CAP 6.8 UF 35V 10% S.TANT	1005305	8
1	C26	CAP 15 UF 20V 10% S.TANT	1004812	9
1	C42	CAP 1 UF 35V 10% S.TANT	1001776	10
1	C43	CAP .47 UF 35V 10% S.TANT	1005965	11
1	C31	CAP .47 UF 100V 10% MYLAR	1000040	12
1	C39	CAP 270 PF 100V 5% DM	1000022	13
2	C28,49	CAP 25 UF 25V GEN AL EL	1000075	14
1	C17	CAP 1900 UF 40V	1011607	18
6	C4,6,7,11,12,13,	CAP .01 UF 100V 20% DISC	1001610-1	19
4	C55,21,18,22	CAP .1 UF 100V 20% DISC	1000030	20
9	C29,32,33,36,30,34,24,37, C27	CAP .022 UF 600V	1011846	21
4	C16,44,35,45	CAP 1000UF 16V	1011849-02	22
2	C23,48	CAP 25 UF 150V	1011349-03	23
1	C47	CAP .068 UF 600V	1011847	24
1	C46	CAP 7.0 UF 200V	1011848	25
2	C53,54	CAP 600 UF 25V	1011849-01	26
2	C2, C51	CAP 180PF 100V 5% DM	1000020	27
				28
1	D44	DIODE IN967A	1110028	29
1	D6	DIODE IN4732A 4.7V	1105138	30
4	D21,38,37,43	DIODE D672	1105275	31
8	D22,27,28,25,24,23,D41,D42	DIODE IN4004	1105796	32
2	D40,7	DIODE IN752 A 5.6V 5% ZENER	1102808	33
3	D34,35,36	DIODE IN3648 13V 5% ZENER	1103988	34
5	D1,2,3,4,15	DIODE IN5624	1110420	35
2	D17,18	DIODE MR752	1110615	36
3	D8,9,14	DIODE 4M5.1Z1 5.1V 1% ZENER	1105873	37
1	D12	DIODE IN754A 6.8V 5% ZENER	1103991	38
4	D31, .10,29,30,	DIODE D664	1100114	39
1	D11	DIODE IN4730A 2.4V 5% ZENER	1101938	40
1	D32	DIODE MR852	1109634-04	41
2	D39,20	DIODE MR812	1111854-00	42
1	D26	DIODE MR817	1111654-01	43
1	D33	DIODE H-V DIODE ASSY (20KV)	11-12553	44
1		HOBSON P92 CAP	1213126	45
2		TIE WRAP	9007031	46
1	R28	RES. 5.6K, 1/4 W, 5%	1301874	47
1	R61	RES. .47,2W,5%	1305258	48
1	R73	RES. 5.1 1/4W 5%	1309422	49
2	R63, R50	RES. 27 1/4W 5%	1301522	50
1	R55	RES. 220 1/4W 5%	1300271	51
3	R50,74,68	RES. 330 1/4W 5%	1300295	52
1	R59	RES. 390 1/2W 5%	1300308	53
1	R57	RES. 47 1W 5%	1302199	54
QTY	REF DESIGNATION	DESCRIPTION	PART NO.	ITEM NO.

PARTS LIST

ETCH BOARD REV D

FIRST USED ON OPTION MODEL VT5Ø

DEC 741		4	7
DEC LM301			4 7
IC TYPE	GND	+5V	-12 +15 -V +V

GND AND 5V ARE USUALLY PIN 7 AND 14 RESPECTIVELY EXCEPTIONS AS ARE STATED ABOVE

IC PIN LOCATIONS

DEC NO.	EIA NO.	DEC NO.	EIA NO.

SEMICONDUCTOR CONVERSION CHART

REV	CHG	CHANGE NO.	DATE
K		5410886-00008	9-19-75
J		5410886-00006	8-4-75
H		5410886-00005	7-28-75
G		5410886-00004	7-25-75
F		5410886-00002	3-4-75
E		5410886-00001	2-10-75
D		ENG. RELEASE	1-1-75

REVISIONS

DRN	E. Wilson	7/1/74
CHK D	Peary	7/1/74
CHK		
PROJ LD		
PROD C	Management	
NEXT HIGHER ASSY		
SCALE	NONE	
SHEET	OF	

digital EQUIPMENT CORPORATION

TITLE: MONITOR POWER SUPPLY

SIZE	CODE	NUMBER	REV.
D	CS	5410886-0-1	K

DIST.

DC: 5410886-0-1

"THIS DRAWING AND SPECIFICATIONS, WHEREIN ARE THE PROPERTY OF DIGITAL EQUIPMENT CORPORATION AND SHALL NOT BE REPRODUCED OR COPIED OR USED IN WHOLE OR IN PART AS THE BASIS FOR THE MANUFACTURE OR SALE OF ITEMS WITHOUT WRITTEN PERMISSION.
COPYRIGHT © 1972 DIGITAL EQUIPMENT CORPORATION"

QTY	REF DESIGNATION	DESCRIPTION	PART NO.	ITEM NO.
1	R28	RES 5.6K 1/4W 5%	13-01874	116
1	T1	TRAN AT 2072(FLY BACK XFMR)	16-11896	117
1	T2	TRAN DRIVER XFMR U9737 (7.5:1)	16-11897	118
1	T4	TRAN AT 4072 (LINEARITY COIL)	16-11899	119
1	T3	TRAN U9934 (SIZE COIL)	16-11891	120
1		CRT CONN. (WITH (4) 1K 1/2W RES.	1212127	121
1	E4	IC DEC 7406	1910741	122
1	E5	IC DEC 741 OP-AMP	1910298	123
3	E1,E2,E3	IC DEC LM301C	1910282	124
20		F PINS	900-3607	125
1		HEAT SPREADER	7412849	126
22	HW1-HW22	EYELET GS4-3	9007836	127
52	W1,2,3,4,W6,W8,W15,W19, W20,W26,W34,W39,W40,W42, W43,W45-W50-W53,W58 W7,W16,W17,W18,W21-W25, W27-W33,W35-W38,W41,W44, W56,W57,W59 ARE W61 W62	JUMPERS .6 #22 WIRE	9107560-1	128

QTY	REF DESIGNATION	DESCRIPTION	PART NO.	ITEM NO.
1	R76	RES. 620 1/4W 5%	1303178	55
13	R3723 90 58 31 84 64. 70 82 78 93 85 86	RES. 1K 1/4W 5%	1300365	56
2	R80,87	RES. 2K 1/4W 5%	1302388	57
5	R29,33,36,60,95	RES. 10K 1/4W 5%	1300479	58
3	R34,91,54	RES. 100K 1/4W 5%	1302400	59
1	R56	RES. 120K 1/4W 5%	1300539	60
1	R75	RES. 150K 1/4W 5%	1302396	61
2	R68,R69	RES. 470K 1/4W 5%	1302398	62
1	R62	RES. 680 1W 5%	1300346	63
2	R72,67 R48	RES. 270K 1/4W 10%	1301310	64
2	R53,65	RES. 470 1/4W 5%	1300316	65
1	R77	RES. 120 1W 5%	1301838	66
2	R34,09	RES. 100 1/2W 5%	1300228	67
2	R96,99	RES. 2.7K 1W 10%	1309023	68
1	R1	RES. .2 3W 3% WW	1311604	69
1	R95	RES. .08 5W 3% WW	1311603	70
4	R2,21,3810	RES. 100 1/4W 5%	1300229	71
2	R97 27	RES. 130,2W5%	1304832	72
1	R32	RES. 1 MEG 1/4W 5%	1309595	73
1	R9	RES. 6.8K 1/4W 5%	1301423	74
1	R11	RES. 330K 1/4W 5%	1302091	75
1	R13	RES. 10K 1/8W 1%	1303312	76
2	R12,15	RES. 4.99K 1.8W 1%	1305324	77
1	R31	RES. 511 3/4W 1%	1300324	78
1	R52	RES. 0.5 3W 3%	1311611	79
1	R16	RES. 47K 1/4W 5%	1302177	80
1	R14	RES. 4.7K 1/4W 5%	1300447	81
1	R17	RES. 12.1K 1.8W 1%	1303313	82
1	R45	RES. 200 1/2W 5%	1302381	83
1	R5	RES. 3.9K 1/2W 5%	1300443	84
1	R22	RES. 4.3K 1/4W 5%	1302389	85
2	R37,24	RES. 1.5K 1/4W 5%	1300391	86
1	R40	RES. 12K 1/4W 5%	1300488	87
2	R6,7	RES. 75 2W 5%	1303039	88
1	R8	RES 2.7M 1/2W 5%	1309680	89
3	R30,42,41,	RES. 10 1/4W 5%	1301317	90
1	R3	RES. 82 1/4W 5%	1301477	91
1	R43,	RES. 150 1/4W 5%	1300250	92
1	R44	RES. 39 1/4W 5%	1302371	93
1	R18	RES. 190K 1/4W 5%	1302397	94
1	R19	RES. 300 1W 5%	1300292	95
1	R25	RES. 1.5K 1/2W 5%	1300394	96
1	R20	RES. 330 1W 5%	1300297	97
1	R98	RES. 500 POT BLUE	13-11853-00	98
1	R71	RES. 1 MEG POT CLEAR	13-11853-02	99
1	R92	RES. 50K POT RED	13-11853-01	100
1	R93	RES. 250K	13-11844	101
1	R66	RES. 5Ω, 10%, 10W	13-11842	102
1	R47	RES 35K 1/4W 5%	13-02394	103
1	Q17	TRANS. D45C6	1510414	104
2	Q15,18	TRANS. 2N3725	1510959	105
1	Q13	TRANS. 2N2904A	1501913	106
4	Q14,20,21,22	TRANS. 2N3904	1509524	107
1	Q10	TRANS. 2N3791	1509581	108
2	Q1,4	TRANS. MXAA55	1510706	109
2	Q2,12	TRANS. 2N5294	1510377	110
3	Q5,6,3	TRANS. MXAA0C	1510705	111
1	Q8	TRANS. 2N3055	1505819	112
1	Q9	TRANS. 2N4923	1509604	113
1	Q16	TRANS D44C8	1510421	114
1	Q19	TRANS. BUY69C BDY98	15-11852	115

REVISIONS		
CHK	CHANGE NO.	REV.

TITLE: MONITOR POWER SUPPLY
SIZE: D | CODE: CS | NUMBER: 5410886-0-1 | REV: K
SCALE: | SHEET 2 OF 4 | DIST:

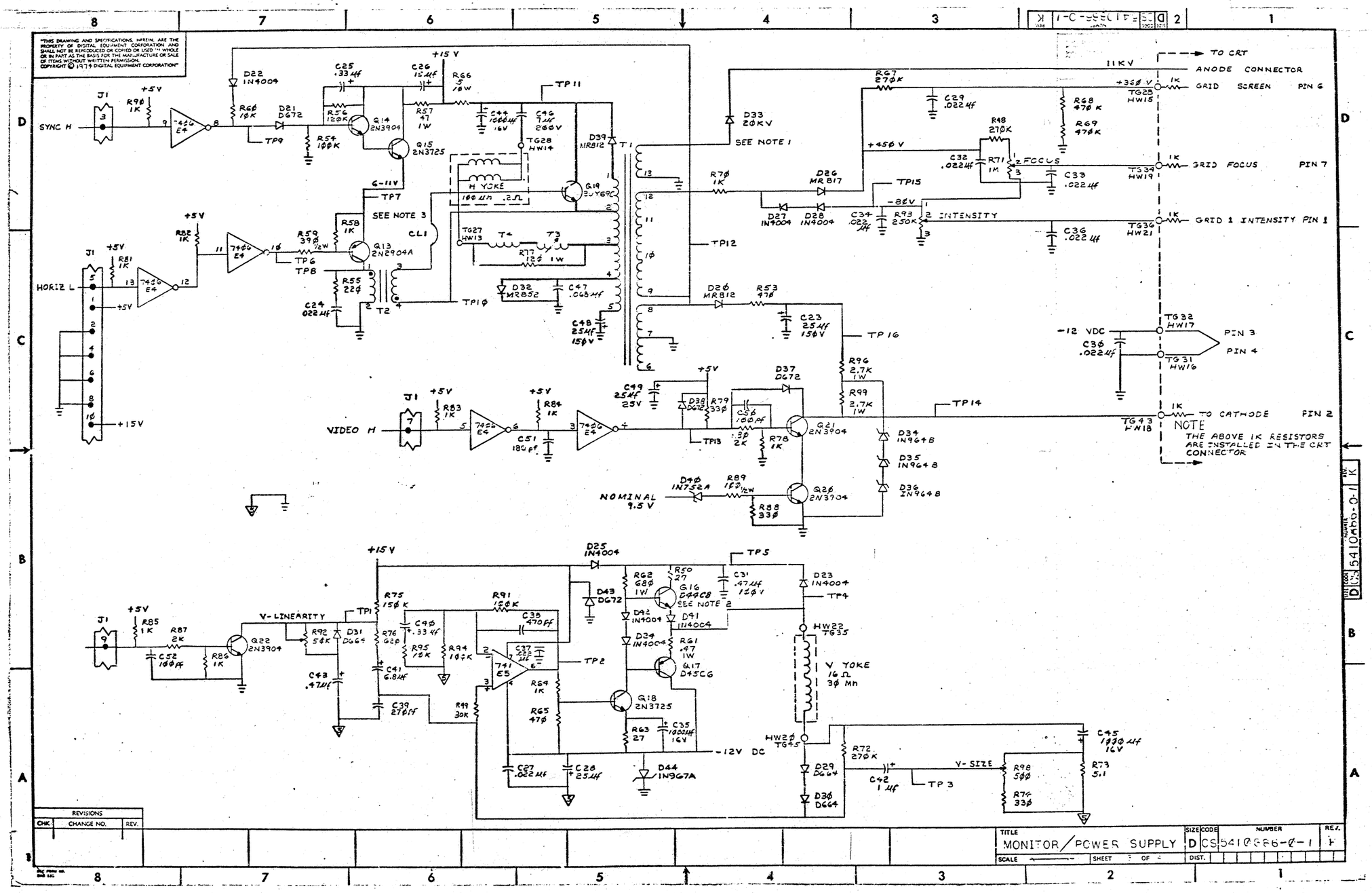

"THIS DRAWING AND SPECIFICATIONS, HEREIN, ARE THE PROPERTY OF DIGITAL EQUIPMENT CORPORATION AND SHALL NOT BE REPRODUCED OR COPIED OR USED IN WHOLE OR IN PART AS THE BASIS FOR THE MANUFACTURE OR SALE OF ITEMS WITHOUT WRITTEN PERMISSION. COPYRIGHT © 1974 DIGITAL EQUIPMENT CORPORATION"
SYNC H
HORIZ L
VIDEO H
V-LINEARITY
TO CRT
ANODE CONNECTOR
GRID SCREEN PIN 6
GRID FOCUS PIN 7
GRID 1 INTENSITY PIN 1
TO CATHODE PIN 2
PIN 3
PIN 4
NOTE
THE ABOVE 1K RESISTORS ARE INSTALLED IN THE CRT CONNECTOR
SEE NOTE 1
SEE NOTE 3
H YOKE
V YOKE 16 Ω 3Ø Mh
NOMINAL 9.5 V
-12V DC
V-SIZE
REVISIONS
CHK
CHANGE NO.
REV.
TITLE
MONITOR/POWER SUPPLY
SIZE D
CODE CS
NUMBER 5410886-0-1
REV. F
SCALE
SHEET 3 OF 4
DIST.

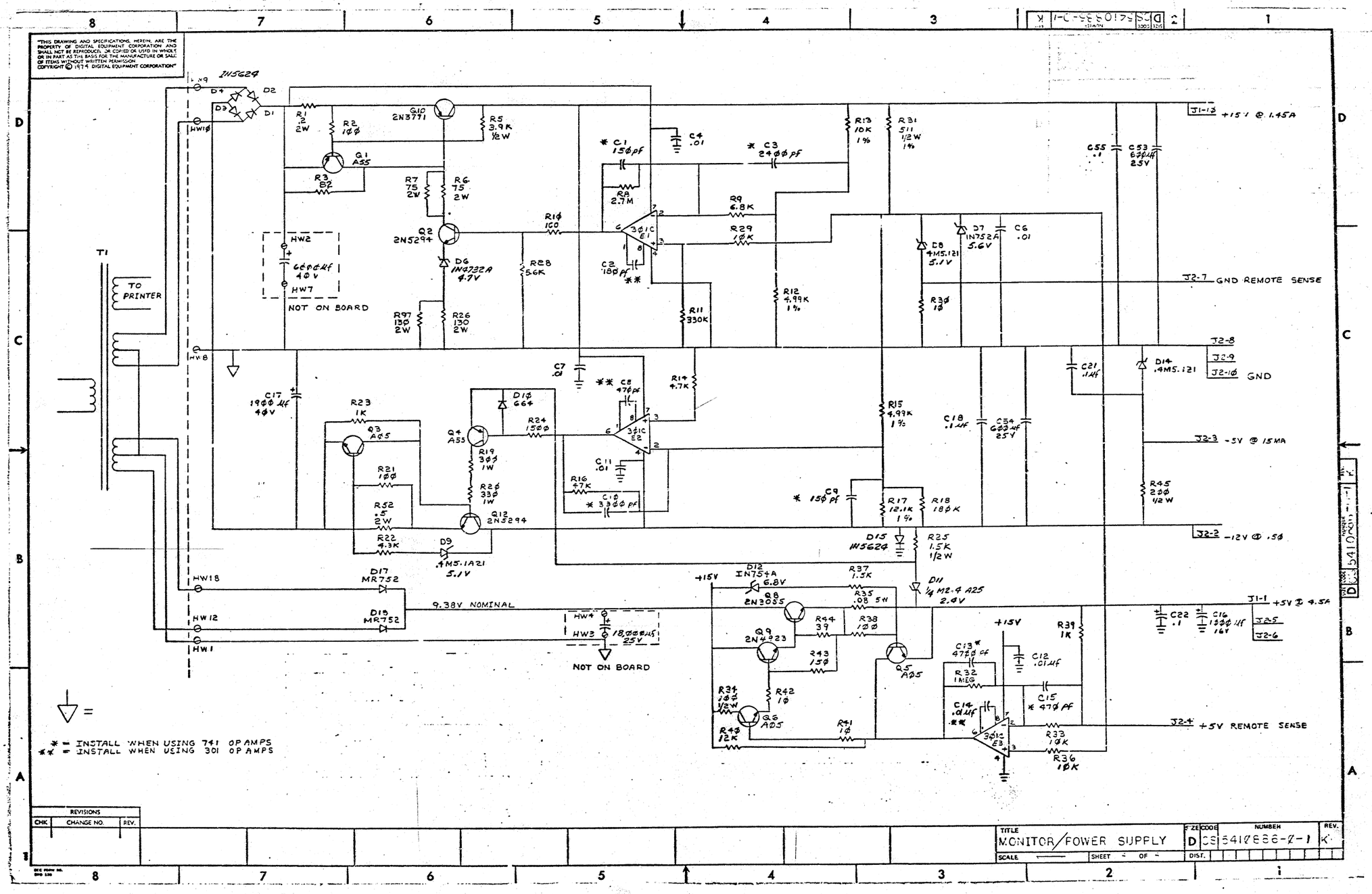
"THIS DRAWING AND SPECIFICATIONS, HEREIN, ARE THE PROPERTY OF DIGITAL EQUIPMENT CORPORATION AND SHALL NOT BE REPRODUCED, OR COPIED OR USED IN WHOLE OR IN PART AS THE BASIS FOR THE MANUFACTURE OR SALE OF ITEMS WITHOUT WRITTEN PERMISSION. COPYRIGHT © 1974 DIGITAL EQUIPMENT CORPORATION"
TO PRINTER
T1
NOT ON BOARD
9.38V NOMINAL
J1-10 +15V @ 1.45A
J2-7 GND REMOTE SENSE
J2-8
J2-9
J2-10 GND
J2-3 -5V @ 15MA
J2-2 -12V @ .50
J1-1 +5V @ 4.5A
J2-5
J2-6
J2-4 +5V REMOTE SENSE
* = INSTALL WHEN USING 741 OP AMPS
** = INSTALL WHEN USING 301 OP AMPS
REVISIONS
CHK
CHANGE NO.
REV.
TITLE
MONITOR/POWER SUPPLY
SIZE D
CODE CS
NUMBER 5410886-0-1
REV. K
SCALE
SHEET
OF
DIST.

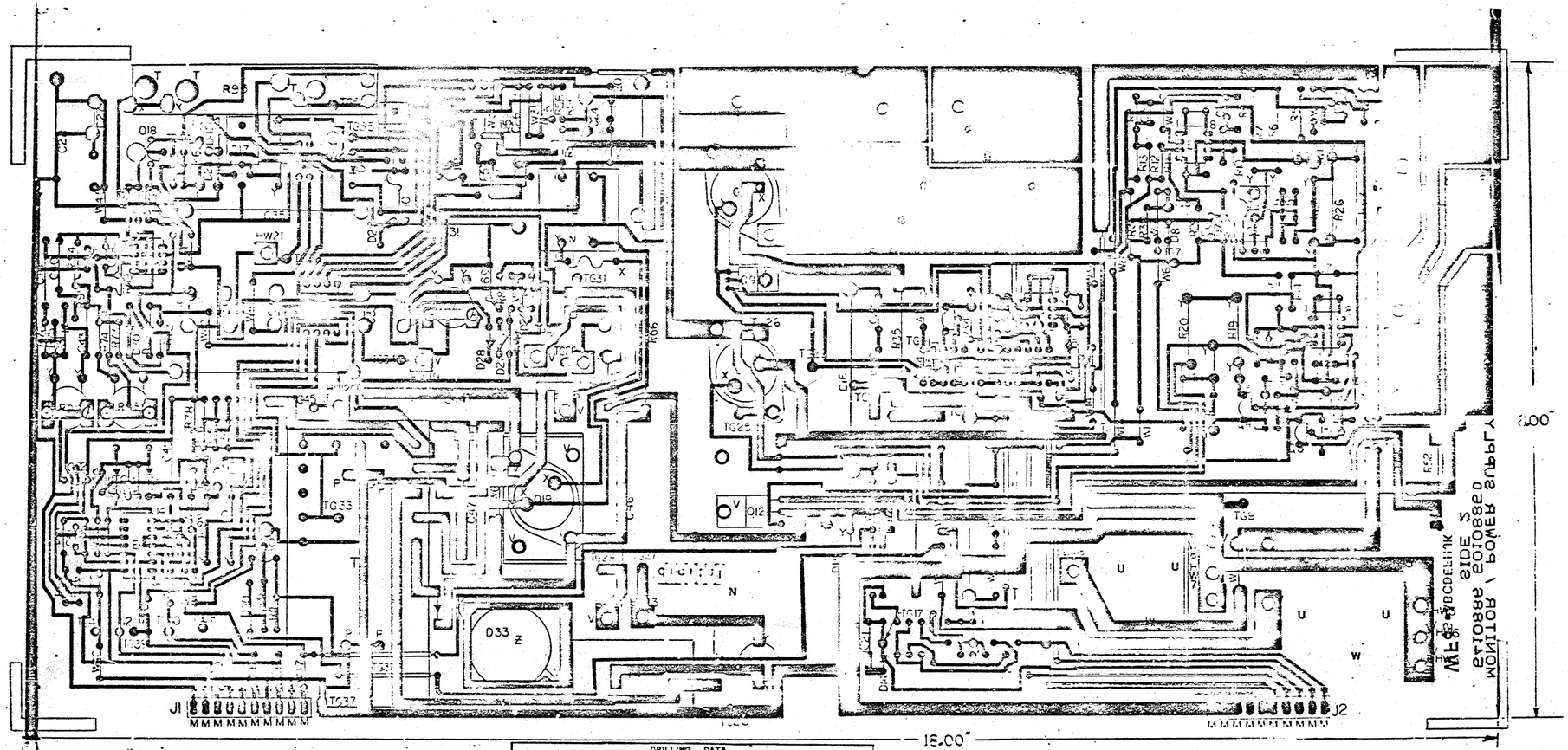

NOTES:
1. Z,W,U, HOLES TO BE PUNCHED WITH PERIPHERY DIE. REF. DWG. E-IA-5010885-0-0.
2. NO REFERENCE HOLES OR PRODUCTION CLUSTER.
3. USE NEW EXCELLON OFFSET 14.2"

DRILLING DATA

HOLE LETTER	DRILL SIZES FOR PTH BOARDS	BEFORE PLATE	AFTER PLATE	FOR NON-PTH BOARDS	CAN TAKE GRIPLETS YES	NO	QTY OF HOLES
NONE				#58 (.0420)			
T				#54 (.0550)			63
X				#43 (.0890)			14
V				#35 (.1285)			42
M				#52 (.0360)			40
W				3/16 (.1875)			2
U				12 (.0500)			4
N				1/8 (.1250)			7
Z				1/2 (.100)			1
P				#52 (.063)			4
T				#15 (.180)			3

BOARD FABRICATION INFORMATION

BOARD SIZE 8X18

BOARD MATERIAL .062 STOCK 1 SE COPPER

EYELET ☐ PLATED THRU ☐

1 SIDED ☒ MULTI-LAYER ☐

NOTCH BEFORE GOLD PLATING ☐

NOTCH AFTER GOLD PLATING ☐

EQUIPMENT CORPORATION

TITLE MONITOR POWER SUPPLY

SIZE E CODE AH NUMBER 5410886-0-5 REV.

MS 40311

REV	NUMBER	SIZE	CODE
M	[illegible]	B	[illegible]

PRODUCT LINE 98

DATE RELEASED 7-16-75

RELEASED BY M. MORGANSTERN

MODULE ECO HISTORY

PAGE 1 OF 1

RELEASED CS REV P

RELEASED ETCH BD REV P

ECO. NO.	ORIGINATOR	DATE WRITTEN	NEW CS REV.	NEW ETCH BOARD REV.	IS IT MANDATORY TO REWORK ALL EARLIER VERSIONS (NOW AVAILABLE OR RETURNED FOR REPAIR) TO THIS REVISION LEVEL? YES	NO	CONDITIONAL (EXPLAIN)	ARE ALL REVISIONS OF THIS MODULE COMPLETELY COMPATIBLE NOW (CAN BE MIXED INDISCRIMINATELY)? YES	NO	CONDITIONAL (EXPLAIN)	SIMPLIFIED CHANGE DESCRIPTION	NO. PARTS ADDED	NO. PARTS DELETED
00001	P PUCCI	1-27-75	C	—		X		X			CHANGED COMP VALUES MADE SEVERAL ETCH CUTS	13	11
00002	R.PUCCI	3-6-75	D	C		X		X			CHANGED COMP VALUES, MADE SEVERAL ETCH CUTS CORRECTED ERRORS IN PARTS LIST		
00003	WHITTLESEY	3-24-75	E	—		X		X			ADD TWO DIODES TO PROTECT ES	2	0
00004	R.PUCCI	4-17-75	F	—		X		X			ADD TWO CAPS	2	0
00004A	R.PUCCI	5-8-75	F			X		X			CANCEL ECO 4	—	—
00005	M.HASTINGS	4-16-75	H	D		X		X			ADJUSTED ETCH UP TO LATEST ECO'S TO CS.	0	0
00006	DICKENSON	3-28-75	F			X		X			ADD 80V TO FOCUS POT	1	0
00007	R.DICKERSON	7-7-75				X		X			ADD ASSY PRINT TO PRINT SET	8	0
00008	R.DICKERSON	5-16-75	K	—		X		X			ADDED CAP CSI TO IMPROVE CHARACTERS	1	0
00009	R.DICKERSON	6-20-75	L			X		X			ADD ASSY PRINT TO PRINT SET	8	0
0007A	R.DICKERSON	7-28-75	L	—		X		X			ADD 15 HOLES TO BOARD. DISREGARD CHANGE DESCRIPTION ON MH-5410886-0-6 ECO #7	0	0

REVISIONS CHK	CHG NO.	REV
VA	00001	A
VA	00002	B
VA	00003	C
VA	00004	D
VA	00004A	E
VA	00005	F
VA	00006	H
VS	00007	J
VT	00008	K
WF	00009	L
VA	0007A	M

DRN. E. Wilson DATE

CHK'D [illegible] DATE

ENG. [illegible] DATE

PROD. [illegible] DATE

DIGITAL EQUIPMENT CORPORATION
MAYNARD, MASSACHUSETTS

TITLE MODULE ECO HISTORY

SIZE B | CODE [illegible] | NUMBER 54108[illegible]-0-[illegible] | REV M

DEC 16-(32a)-1026-A971

DRB 104

This drawing and specifications, herein, are the property of Digital Equipment Corporation and shall not be reproduced or copied or used in whole or in part as the basis for the manufacture or sale of items without written permission.

DIGITAL EQUIPMENT CORPORATION
MAYNARD, MASSACHUSETTS

INCOMING INSPECTION PROCEDURE DATE 6/30/75

TITLE VT50 Heat Spreader

REVISIONS

REV	DESCRIPTION	CHG NO	ORIG	DATE	APPD BY	DATE
*	Original Release		C.Hilliard	6/30/75	[illegible]	7-7-75

ENG	APPD	SIZE	CODE	NUMBER	REV
[signature]	[signature]	A	II	7412840-0-0	

DEC 3-(491)-1283-N670

INSPECTION PROCEDURE CONTINUATION SHEET

TITLE VT50 Heat Spreader

1.0 Inspecttion by attributes.

1.1 All other dimensions and/or characteristics pertaining to 7412849 that are not listed must be inspected on 20% of the sample size from each lot. All defects must be listed and inspected on the entire A.Q.L. sample. Parts must conform completely to print.

1.2 Applicable document DEC Metal Quality Manual..

2.0	CHARACTERISTICS	PROCEDURE
2.1	Check position of 10 #8-32 inserts	Use fixture #94-02147-3
2.2	Check position of holes; on surface "B"	Use fixture #94-02148-3
2.3	Check for finish	Visual
2.4	Check for "D" hole for masking	Visual
2.5	Material thickness	Vernier calipers
2.6	Workmanship	Visual

SIZE	CODE	NUMBER	REV
A	II	7412849-0-0	

DEC 3-(332)-1283-1A-R175

"THIS DRAWING AND SPECIFICATIONS, HEREIN, ARE THE PROPERTY OF DIGITAL EQUIPMENT CORPORATION AND SHALL NOT BE REPRODUCED OR COPIED OR USED IN WHOLE OR IN PART AS THE BASIS FOR THE MANUFACTURE OR SALE OF ITEMS WITHOUT WRITTEN PER. SION COPYRIGHT © 1975 DIGITAL EQUIPMENT CORPORATION"

NOTES:

1. JUMPER "W4" ADDED FOR 5410902-2 VARIATION (VT5ØH, VT5ØI)
2. FOR 5410902-2 VARIATION (VT5ØH, VT5ØI) REMOVE W1, W2 AND INSERT W3.
3. BOM'S FOR 5410902-0, 5410902-2, 5410902-4 MUST BE UPDATED SIMULTANEOUSLY
4. REMOVE "W7" FOR 5410902-4 (VT5ØB)
5. OPTIONAL JUMPERS FOR ODD PARITY, INSERT W6 AND TO CAUSE THE 7TH DATA BIT TO BE TRANSMITTED AS A SPACE, INSERT JUMPER W5

VARIATION	COMMENTS
5410902-0	BASIC VT5Ø
5410902-1	HEAT CYCLED SYSTEM TESTED 5410902-0
5410902-2	VT MODEL WITH DIRECT CURSOR CONTROL AND COPIER SUPPORT
5410902-3	HEAT CYCLED SYSTEM TESTED 5410902-2
5410902-4	BASIC VT5Ø WITH COPIER SUPPORT
5410902-5	HEAT CYCLED SYSTEM TESTED 5410902-4

QTY	VARIATION	ITEM# 33 LEGEND E1 E4 E8 E11 E15 E19 E24 E28
4	5410902-0	23083A2 23083A2 —— —— 23083A2 23083A2 —— ——
8	5410902-2	E2Ø-2 E2Ø-4 E2Ø-6 E2Ø-8 E2Ø-3 E2Ø-5 E2Ø-7 E2Ø-9
6	5410902-4	B2Ø-2 B2Ø-4 B2Ø-6 —— B2Ø-8 B2Ø-5 B2Ø-7 ——

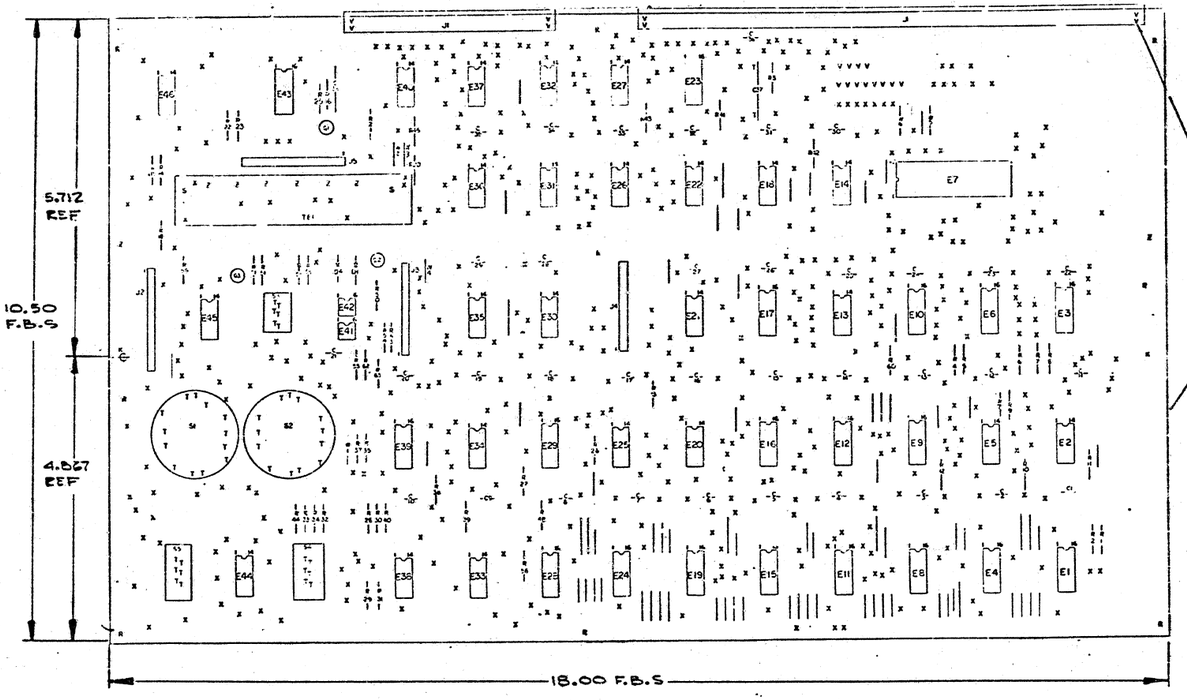

REF			
REF		X-Y COORDINATE HOLE	M-MH-5410902-0-4	1
REF		ASSY-DRILLING HOLE LAYOUT	D-AH-5410902-0-5	2
REF		MODULE ECO HISTORY	B-MH-5410902-0-6	3
1		ETCHED CIRCUIT BOARD	5010901	4
38	C1 THRU C36, C41, C42	CAP. .47MF. 100V. E207.	1001610-01	5
1	C37	CAP. 30UF. 25V	1001796	6
1	C38	CAP. 33UF. 10V. E107.	1000076	7
1	D1	DIODE. MOL830	1105810	8
2	D4, D5	DIODE. D672	1105275	9
21	R1-R8, R26-R34, R38, R44, R53, R54	RES 1K 1/4W 5%	1300365	10
22	R9-R15, R18, R23, R25, R35, R37, R39-R43, R45, R46, R58, R59, R60, R61	RES 4.7K 1/4W 5%	1300447	11
2	R21, R22	RES 2.2K 1/4W 5%	1300417	12
1	R55	RES 120K 1/4W 5%	1300539	13
1	R51	RES 150 1/4W 5%	1300560	14
2	R16, R50	RES 39K 1/4W 5%	1302514	15
1	R56	RES 220 1/4W 5%	1300271	16
1	R62	RES 750 1/4W 5%	1301401	17
1	R63	RES 7.5K 1/4W 5%	1301422	18
2	E33, E36	I.C DEC 74197	1910035	19
3	E2, E26 E4Ø	I.C DEC 7474	1905647	20
7	E5, E21, E27, E30, E32 E36, E43	I.C DEC 7400	1905676	21
6	E9, E12, E16, E23, E29, E39	I.C DEC 74161	1910650	22
1	E2Ø	I.C DEC 7490	1909051	23
2	E13, E34	I.C DEC 7404	1909686	24
4	E24, E31, E37, E44	I.C DEC 7402	1904004	25
4	E3, E6, E10, E17	I.C DEC 74153	1909937	26
1	E35	I.C DEC 74H1Ø	1909057	27
1	E45	I.C DEC 7430	1905580	28
1	E7	I.C DEC 1402 UART ASYNCH	1912469	29
2	E14, E22	I.C DEC 7495	1909086	30
1	E18	I.C DEC 7430	1905578	31
1	E46	OSCILLATOR	1812131	32
—	SEE LEGEND	IC DEC 5603A	2300048	33
2	E41, E42	OPIO-ISOLATOR	1610727	34
3	Q1, Q2, Q3	TEANS 6431	1909328	35
3	S3, S4, S5	SWITCH, SLIDE	1209.9	36
2	S1, S2	SWITCH, ROTARY	1270002	37
77	——	PINS 'P'	9009607	38
42	——	PINS STRAIGHT	9009608	39
1	TB	STRIP, TERMINAL	1211905	40
56		JUMPERS	9107560-1	41
549		EYELETS	9000735	42
1	SOCKET	~~SKT 40 PIN~~	~~2-111~~	~~43~~
19		JUMPER, INSULATED	9009155	44

QTY	REF. DESIGNATION	DESCRIPTION	PART NO.	ITEM NO.

IC TYPE	GND	+5V
74153	8	16
7490	10	5
74161	8	16

GND AND 5V ARE USUALLY PIN 7 AND 14 RESPECTIVELY EXCEPTIONS ARE STATED ABOVE

IC PIN LOCATIONS

FIRST USED ON OPTION MODEL: VT5Ø

ETCH BOARD REV: C

PARTS LIST

SEMICONDUCTOR CONVERSION CHART

DEC NO. | EIA NO. | DEC NO. | EIA NO.

REV.	CHANGE NO.	CHK	DATE
H	ORIGINATED		
J	5410902-00009		

M Morganstern 7/1/75
M MORGANSTERN
George Davies 7/1/75

DRW. [illegible] DATE 7/31/75
CHK'D. [illegible] DATE 8/1/75
ENG. [illegible] DATE 7/31/75
PROJ. ENG. [illegible] DATE 7/31/75
PROD. [illegible] DATE 7/31/75
NEXT HIGHER ASSY

SCALE —
SHEET 1 OF 5

digital

TITLE: ROM UART AND TIMING

SIZE D | CODE CS | NUMBER 5410902-0-1 | REV. J

DIST.

5410902-0-1 J

"THIS DRAWING AND SPECIFICATIONS, HEREIN, ARE THE PROPERTY OF DIGITAL EQUIPMENT CO-RPORATION AND SHALL NOT BE REPRODUCED OR COPIED OR USED IN WHOLE OR IN PART AS THE BASIS OF THE MANUFACTURE OR SALE OF ITEMS WITHOUT WRITTEN PERMISSION.
COPYRIGHT © '75, DIGITAL EQUIPMENT CORPORATION"

1.3 µS CYCLE TIME

72 NS

OSC A = 13.824 MHZ

E. = DO "E" INSTRUCTIONS
F. = DO "F" INSTRUCTIONS
W. = WRITE ENABLE, IF SELECTED
G. = CLEAR WRITE FLOP
H. = TEST FLAGS; INC PC
J. = CONDITIONAL PC INC
LOAD PC FROM ROM OR INC OR DO NOTHING

RUT 1 H FLAG H

RUT 1 T2 L

RUT 2 B OSC A

RUT 2 INIT H

RUT 2 INIT L

RUT 1 9600 S2 A7

SYNC L

HORIZ L

TSC L

B INIT L

VERT H

RUT 1 4800 S2 A6
RUT 1 2400 S2 A5
RUT 1 1200 S2 A4
RUT 1 600 S2 A3
RUT 1 300 S1 A4
RUT 1 150 S1 A5
RUT 1 75 S1 A6
RUT 1 110 S2 A2

60 HZ W1

+ INSERT JUMPER FOR 50HZ VT52

REVISIONS		
CHK	CHANGE NO.	REV.

TITLE	SIZE	CODE	NUMBER	REV.
ROM UART & TIMING (RUT 1)	D	DCS	5410902-0-1	T
SCALE —	SHEET 2 OF 5	DIST.		

DCS 5410902-0-1

"THIS DRAWING AND SPECIFICATIONS HEREIN, ARE THE PROPERTY OF DIGITAL EQUIPMENT CORPORATION AND SHALL NOT BE REPRODUCED OR COPIED OR USED IN WHOLE OR IN PART AS THE BASIS FOR THE MANUFACTURE OR SALE OF ITEMS WITHOUT WRITTEN PERMISSION. COPYRIGHT © 1975, DIGITAL EQUIPMENT CORPORATION"

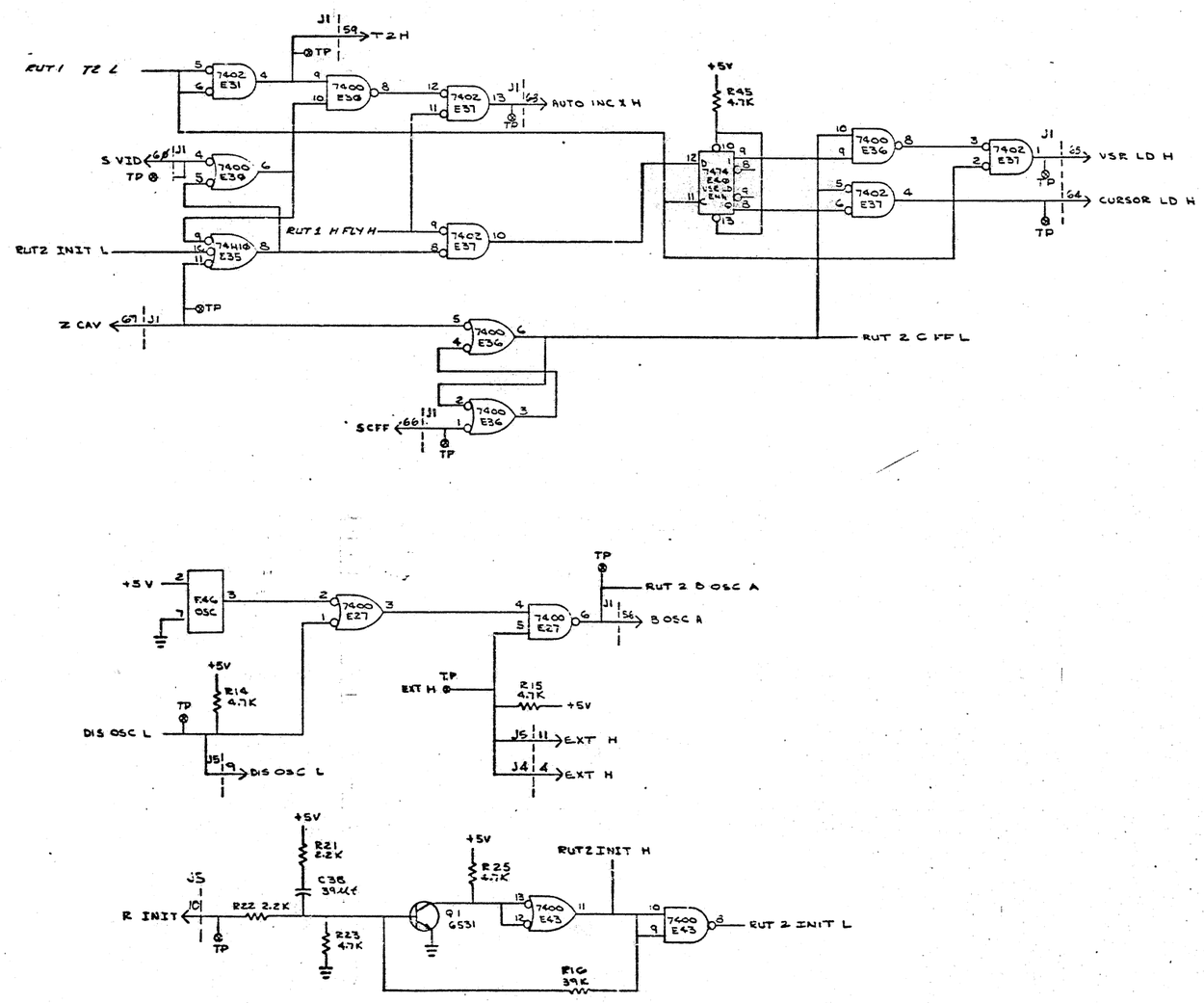

REVISIONS		
CHK	CHANGE NO.	REV.

TITLE	SIZE	CODE	NUMBER	REV.
ROM UART & TIMING (RUT 2)	D	CS	5410902-0-1	J
SCALE	SHEET 3 OF 5	DIST.		

D CS 5410902-0-1 J

"THIS DRAWING AND SPECIFICATIONS, HEREIN, ARE THE PROPERTY OF DIGITAL EQUIPMENT CORPORATION AND SHALL NOT BE REPRODUCED OR COPIED OR USED IN WHOLE OR IN PART AS THE BASIS FOR THE MANUFACTURE OR SALE OF ITEMS WITHOUT WRITTEN PERMISSION.
COPYRIGHT ©1975 DIGITAL EQUIPMENT CORPORATION"

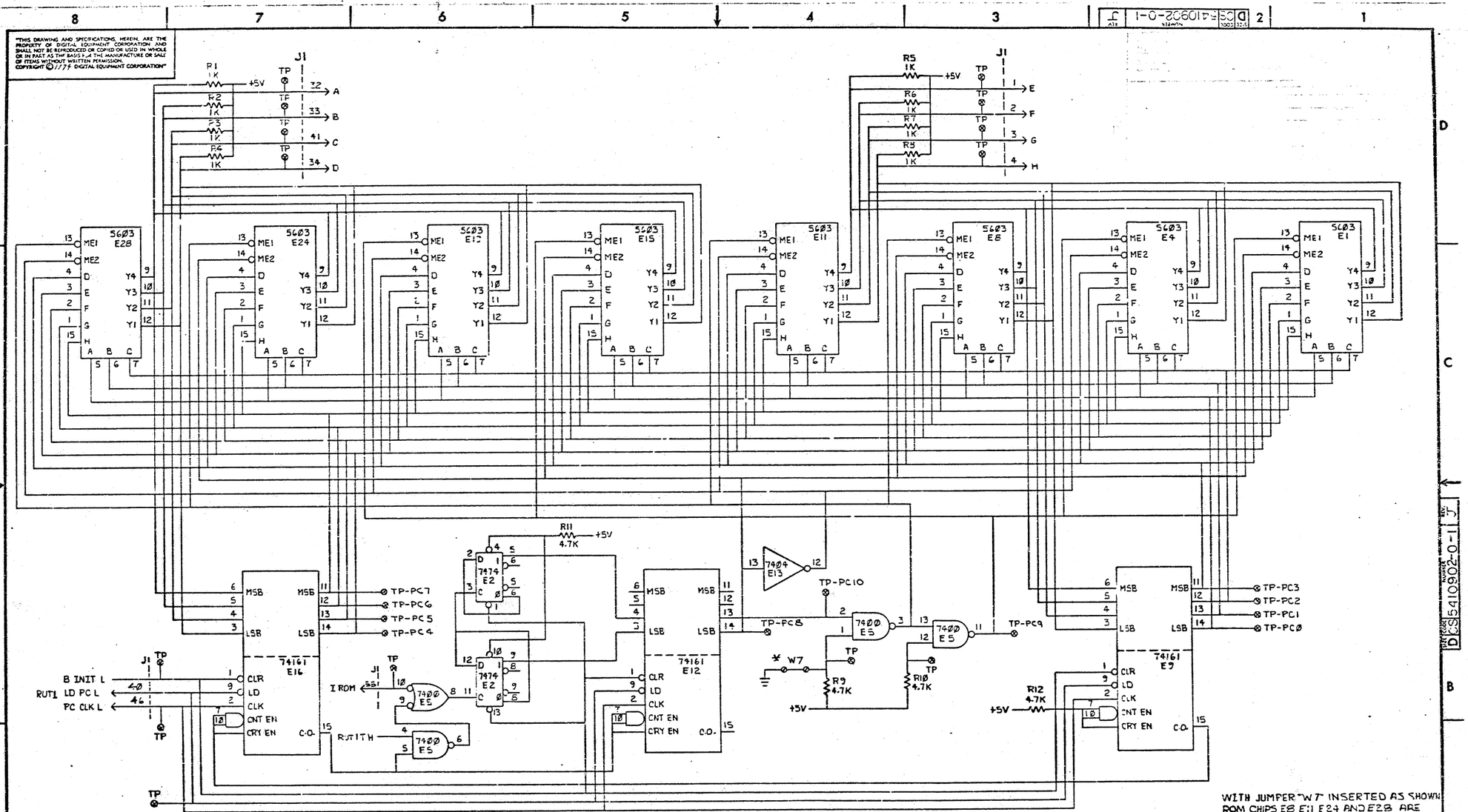

WITH JUMPER "W7" INSERTED AS SHOWN ROM CHIPS E8 E11 E24 AND E28 ARE DISABLED.
FOR VT50 WITH COPIER OR VT50H, VT50J MODELS, REMOVE JUMPER W7 ENABLING ALL 2 ROM CHIPS.

REVISIONS		
CHK	CHANGE NO.	REV.

TITLE	SIZE	CODE	NUMBER	REV.
ROM UART & TIMING (RUT 3)	D	CS	5410902-0-1	T
SCALE —	SHEET 2 OF 5		DIST.	

DCS 5410902-0-1 T

THIS DRAWING AND SPECIFICATIONS, HEREIN, ARE THE PROPERTY OF DIGITAL EQUIPMENT CORPORATION AND SHALL NOT BE REPRODUCED OR COPIED OR USED IN WHOLE OR IN PART AS THE BASIS FOR THE MANUFACTURE OR SALE OF ITEMS WITHOUT WRITTEN PERMISSION.
COPYRIGHT © 1976 DIGITAL EQUIPMENT CORPORATION

* NOTE: JUMPER W3 INSTALLED & JUMPER W2 CUT FOR 5410902-2 (VT50#H, VT50#J) VARIATION ONLY

NOTE: JUMPER W4 INSTALLED ON 5410902-2 (VT50#H, VT50#J) VARIATION ONLY

RECEIVE LOOP

TRANSMIT LOOP

MUX A*	MUX B*	
0	0	RCM
0	1	402
1	0	AC
1	1	UART

REVISIONS		
CHK	CHANGE NO.	REV.

TITLE	SIZE	CODE	NUMBER	REV.
RCM UART & TIMING	D	CS	5410902-0-1	J1

SCALE — SHEET 5 OF 5 — DIST.

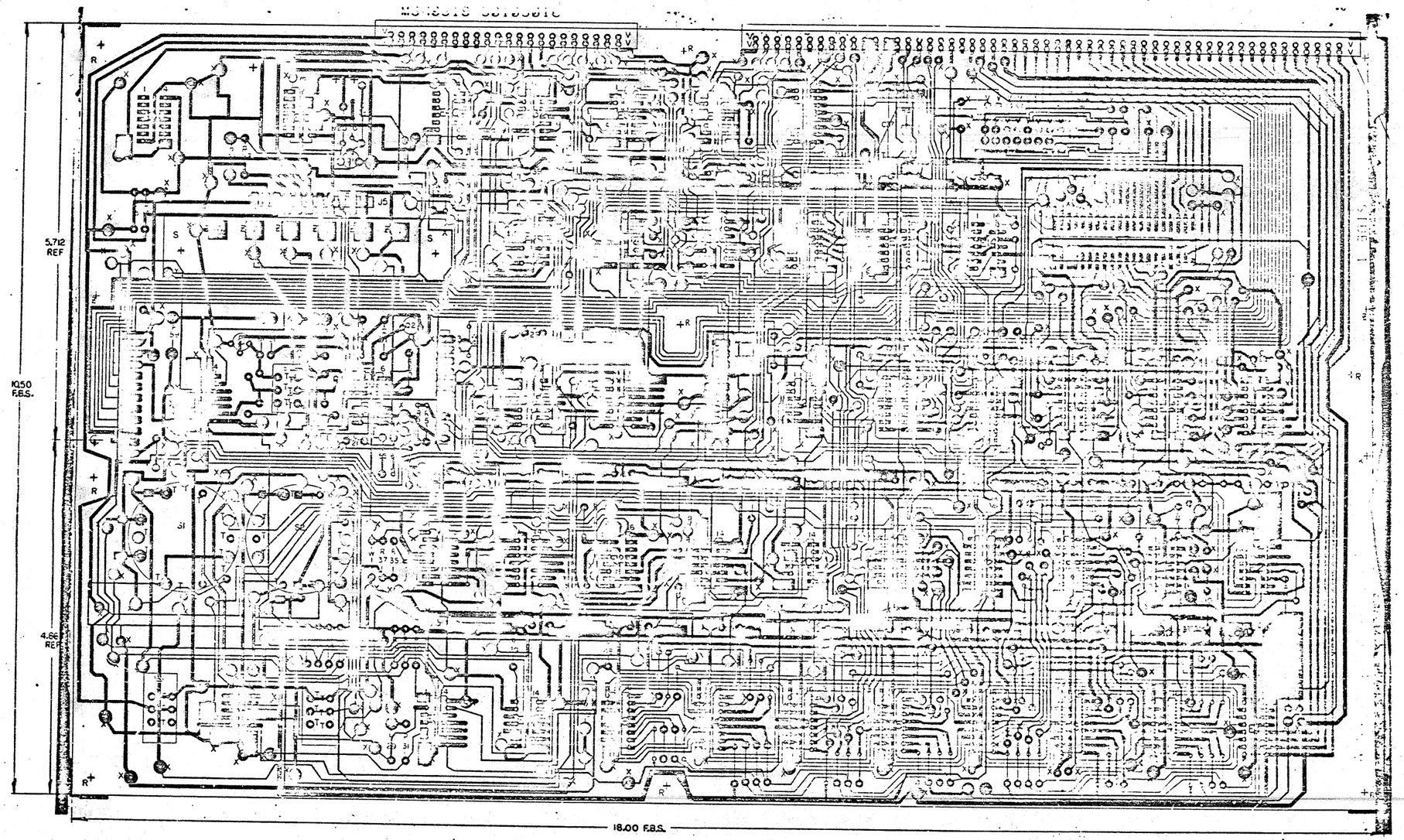

NOTES:

1. X HOLES ARE FOR EYELETS
2. R HOLES ARE PUNCHED SLOTS

DRILLING DATA							
HOLE LETTER	FOR PTH BOARDS			FOR NON-PTH BOARDS			QTY OF HOLES
NONE				[illegible]3 (.042 DIA)			
X				[illegible] (.0[illegible]5 DIA)			
T				[illegible] (.0[illegible]35 DIA)			46
Z				[illegible] (.125 DIA)			8
S				[illegible] (.155 DIA)			2
V				[illegible]51 (.039 DIA)			166

BOARD FABRICATION INFORMATION

BOARD SIZE 10.5 X 18.0

BOARD MATERIAL .062 THK 1 OZ COPPER

EYELET ☒ PLATED THRU ☐

2 SIDED ☐ MULTI-LAYER ☐

NOTCH BEFORE COLD PLATING ☐

NOTCH AFTER COLD-PLATING ☐

APPROVED		EQUIPMENT CORPORATION	
		TITLE: ROM UART & TIMING	
FIRST USED ON: 5410902			
SCALE: 2:1	SIZE: E	NUMBER: AH 5410902-0-5	REV: J
DESIGN REV: C		MS 40318	

REV	NUMBER	SIZE	CODE
J	5410902-0-6	B	14141

PRODUCT LINE 98

DATE RELEASED 1-10-75

RELEASED BY M MORGANSTERN

MODULE ECO HISTORY

PAGE 1 OF 1

RELEASED CS REV A

RELEASED ETCH BD REV B

ECO. NO.	ORIGINATOR	DATE WRITTEN	NEW CS REV.	NEW ETCH BOARD REV.	IS IT MANDATORY TO REWORK ALL EARLIER VERSIONS (NOW AVAILABLE OR RETURNED FOR REPAIR) TO THIS REVISION LEVEL? YES	NO	CONDITIONAL (EXPLAIN)	ARE ALL REVISIONS OF THIS MODULE COMPLETELY COMPATIBLE NOW (CAN BE MIXED INDISCRIMINATELY)? YES	NO	CONDITIONAL (EXPLAIN)	SIMPLIFIED CHANGE DESCRIPTION	NO. PARTS ADDED	NO. PARTS DELETED
00001	MORGASTERN	1-27-75	B	B							1. CAPS ADDED TO 74123 R55 INCREASED TO 39K Ω. 2. DOCUMENT CHANGES REQUIRED TO PRODUSE 5410902-1 THRU 5410902-3	1. 2 2. 8	1. NONE 2. 4
00002	MISITANO	2-4-75	C	B		✓			✓		CHANGE R50 TO 39KΩ	0	0
00003	BUZYNSKI	2-27-75	D	B		✓				2 AND 3 NOT COMPATIBLE	1. DOCUMENT CHANGE REQUIRED TO PRODUSE 5410902-2 2. CHANGE ROM DESIGNATIONS FOR 5410902-4	0	0
00004	DICKENSON	3-4-75	E	B					✓		DOCUMENTATION CORRECTION	0	0
00005	BUZYNSKI	4-29-75	F	B	✓		5410902-2 VARIATIONS ONLY (VT50 H)		✓	ALL -2 AND -3 VARIATIONS ARE COMPATIBLE	JUMPER WIRES FOR +5, GND ADDED TO -2 VARIATION (VT50 H, VT50 J)	1	—
00006	DICKENSON	4-14-75	H	C		✓			✓		NEW ETCH REV C INITIALIZE CIRCUIT CHANGE TO ELIMINATE E43-74123	4	9
00007	NEUMANN	4-30-75	J			✓			✓		1. DELETE UART SOCKET 2 CORRECT E7 ON CS SHEET 1 OF 4	0	1
00008	PUCCI	27-OCT-75	K			X			X		DOCUMENTATION CORRECTIONS	0	0

REVISIONS CHK	CHG NO.	REV.
	00001	A
	00002	B
	00003	C
	00004	D
V.A.	00005	E
V.A.	00006	F
A.Z.	00007	H
V.A.	00008	J

DRN.	DATE
CHK'D	DATE
ENG.	DATE
PROD.	DATE

DIGITAL EQUIPMENT CORPORATION
MAYNARD, MASSACHUSETTS

TITLE: MODULE ECO HISTORY

SIZE	CODE	NUMBER	REV.
B	14141	5410902-0-6	J

DEC 15-(326)-1026-N971
DRB 104

"THIS DRAWING AND SPECIFICATIONS, HEREIN, ARE THE PROPERTY OF DIGITAL EQUIPMENT CORPORATION AND SHALL NOT BE REPRODUCED OR COPIED OR USED IN WHOLE OR IN PART AS THE BASIS FOR THE MANUFACTURE OR SALE OF ITEMS WITHOUT WRITTEN PERMISSION.
COPYRIGHT © 1974 DIGITAL EQUIPMENT CORPORATION"

NOTES:

1. 5410906-1 IS THE HEAT AND SYSTEM TESTED 5410906-0.
2. WIRES ADDED FOR RELOCATION OF K1 (ITEM #9)
   SEE AH DWG FOR REWORK DETAILS.

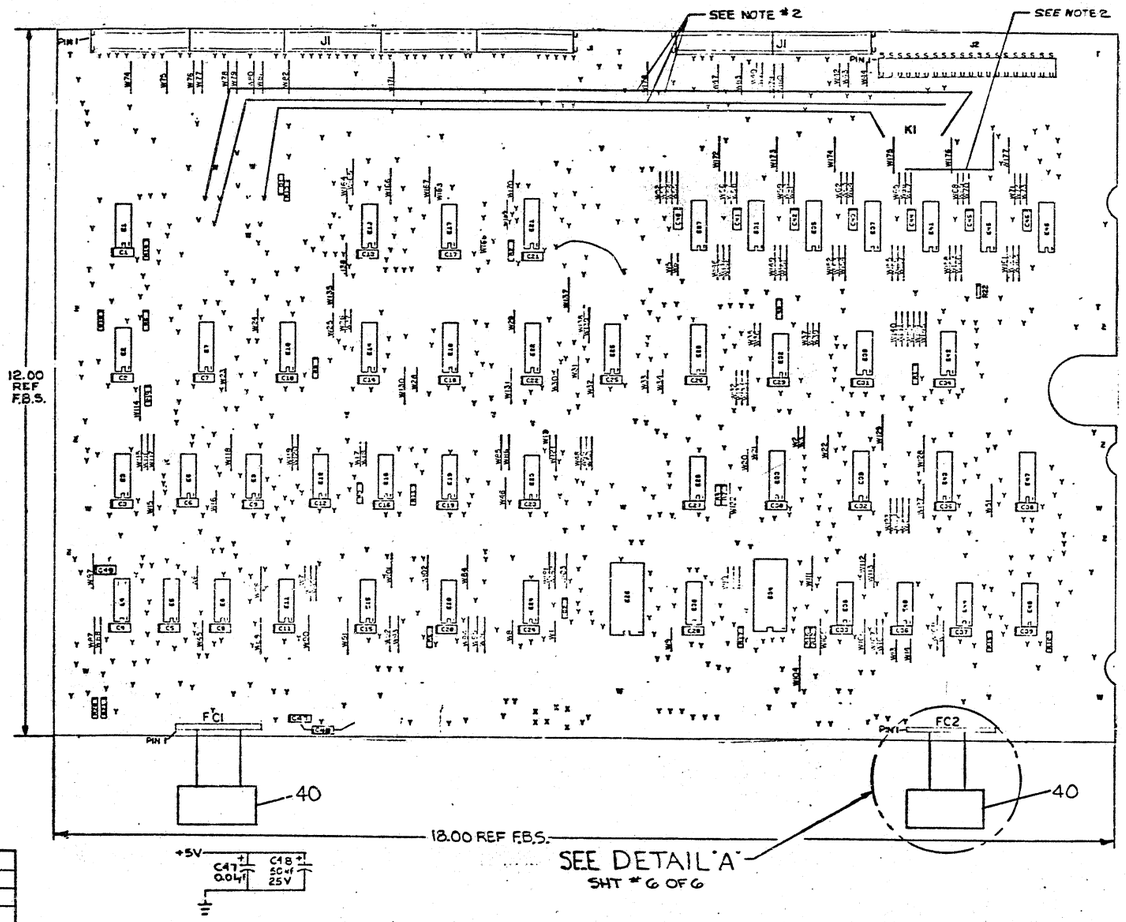

REF				
REF		X-Y COORDINATE HOLE LOCATION	K-CO-5410906-4	1
REF		ASSY DRILLING HOLE LAYOUT	E-AH-5410906-5	2
REF		MODULE ECO HISTORY	B-MH-5410906-6	3
1		ETCHED CIRCUIT BOARD	5010905	4
1	C48	CAPACITOR 50uf 25V	1001798	5
47	C1 THRU C47	CAPACITOR .01 DISC	1001610-01	6
2	D1,D2	DIODE	1100114	7
1	S1	SLIDE SWITCH	1210919	8
1	K1	RELAY PHILIPS 12V DC 19A111 AE	1212049-0-0	9
7	J1	11 PIN SIDE ENTRY AMP CONNECTOR	1211851	10
2	J2,	10 PIN BOTTOM ENTRY AMP CONNECTOR	1211850	11
1	R13	RESISTOR 100 OHM 1/4W 5%	1300229	12
11	R2,R3,R4,R7,R10,R21,22,	RESISTOR 1K 1/4W 5%	1300365	13
11	R2,R5,R6,R8,R9,R11,R12, R15,R17,R18,	RESISTOR 4.7K 1/4W 5%	1300447	14
1	R24	RESISTOR 470 1/4W 5%	1300316	15
1	R20	RESISTOR 47 1/4W 5%	1300202	16
5	E15,E20,E32,E38,E42	IC DEC 7495	1909055	17
6	E5,E8,E9,E19,E40,E44	IC DEC 7400	1905575	18
2	E17,E24	IC DEC 74H30	1909060	19
1	E21	IC DEC 74157	1910655	20
5	E14,E18,E22,E25,E28	IC DEC 74193	1910019	21
2	E7,E10	IC DEC 7485	1910224	22
2	E23,E29	IC DEC 9242	1909712	23
2	E2,E16	IC DEC 7474	1905547	24
3	E11,E12,E36	IC DEC 74H10	1909057	25
3	E3,E6,E30	IC DEC 7404	1909686	26
1	E1	IC DEC 7408	1910741	27
1	E34	IC DEC 74150	1910153	28
3	E33,E31,E47	IC DEC 7442	1910048	29
1	E43	IC DEC 74155	1910556	30
2	E13,E48	IC DEC 74H11	1909267	31
1	E4	IC DEC 7402	1909004	32
7	E27,E31,E35,E37,E41,E45, E46	IC DEC 2102-1 1024 X 1 RAM	2111318-1	33
1	E26	IC DEC 2513 24 PIN CHAR GEN	23000A7-01	34
745		EYELET	9007831	35
180		JUMPERS	9007560-01	36
1		24 PIN IC SOCKET	1210833	37
A/R		WIRE 30 AWG. INSULATED	9105740	38
10		JUMPERS, INS	9009165	39
2		CABLE ASSY.	CA070-04-00	40
1		TERMINAL	9007930	41
A/R		WIRE, 18 AWG INSULATED	9105730-55	42
1	C49	CAP 82pF 100V 5%	1000015	43

QTY	REF. DESIGNATION	DESCRIPTION	PART NO.	ITEM NO.

PARTS LIST

ETCH BOARD REV. C

IC 74150	12	24
IC 7495	8	14
IC 2102	9	10
IC 2513	12	24
IC TYPE	GND	+5V

GND AND 5V ARE USUALLY PIN 8 AND 16 RESPECTIVELY EXCEPTIONS ARE STATED ABOVE

IC PIN LOCATIONS

REV.	CHANGE NO.	CHK	DATE	NAME
A	5410906-00001			M. WHITLESEY
B	COMBINED			M. MORGANSTERN
C	5410906-00002			M. MORGANSTERN
D	5410906-00003			M. MORGANSTERN
E				M. MORGANSTERN
F	5410906-00004			M. MORGANSTERN
G	5410906-00005			M. MORGANSTERN
H	5410906-00006			M. MORGANSTERN
J	5410906-00007			M. MORGANSTERN
K	5410906-00008			M. MORGANSTERN

FIRST USED ON OPTION MODEL: VT50

DEC NO.	EIA NO.	DEC NO.	EIA NO.

SEMICONDUCTOR CONVERSION CHART

DRN. M. Whitlesey DATE
CHK'D R.F. Osborne DATE 4 JUN 74
ENG. M. Morganstern DATE
PROJ. ENG. M. Morganstern DATE
PROD. M. Morganstern DATE

NEXT HIGHER ASSY: B-DD-VT50-0

SCALE —
SHEET 1 OF 6

digital

TITLE: DATA PATHS MEMORY AND DECODER

SIZE	CODE	NUMBER	REV.
D	CS	5410906-0-1	K

DIST.

5410906-0-1 K
SIZE CODE D CS

"THIS DRAWING AND SPECIFICATIONS, HEREIN, ARE THE PROPERTY OF DIGITAL EQUIPMENT CORPORATION AND SHALL NOT BE REPRODUCED OR COPIED OR USED IN WHOLE OR IN PART AS THE BASIS FOR THE MANUFACTURE OR SALE OF ITEMS WITHOUT WRITTEN PERMISSION.
COPYRIGHT © 1977 DIGITAL EQUIPMENT CORPORATION"

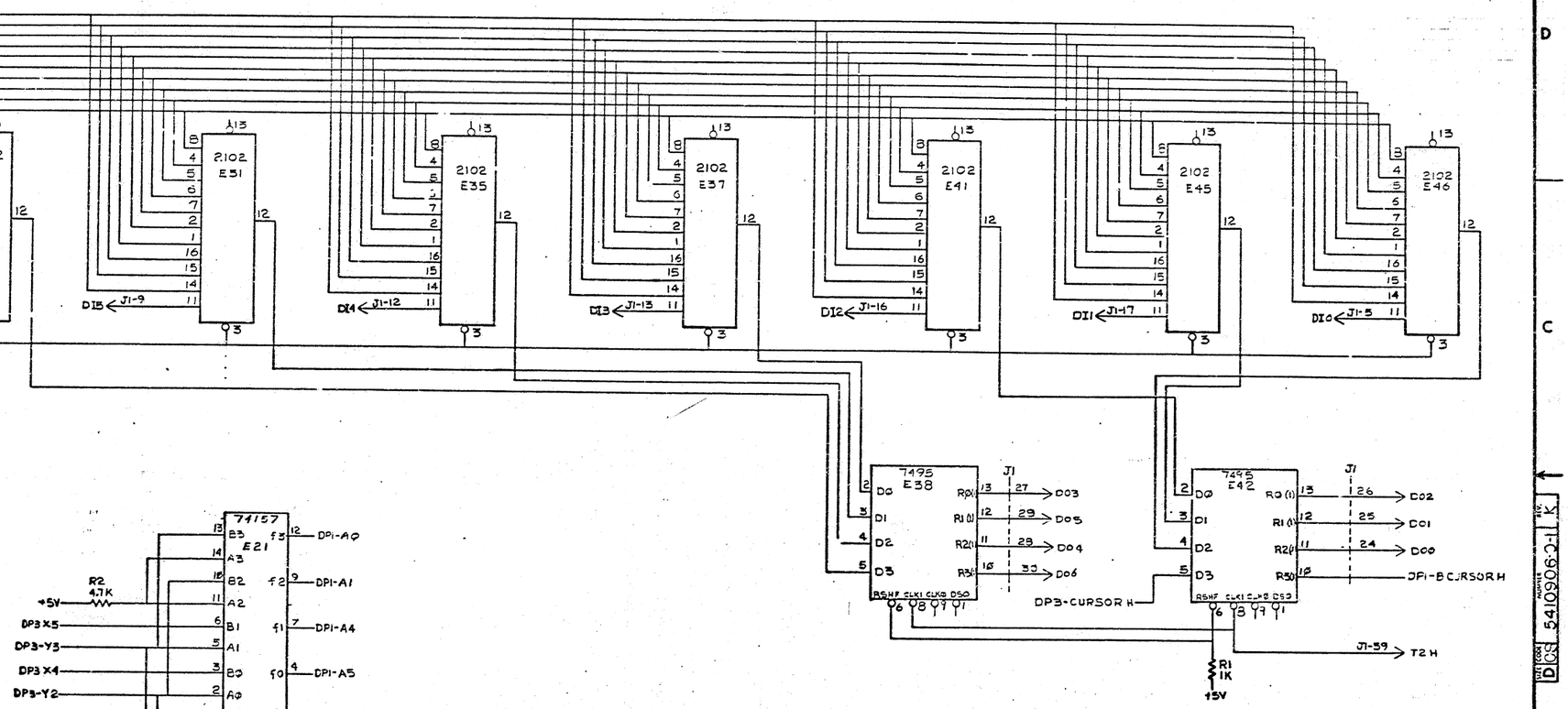

REVISIONS		
CHK	CHANGE NO.	REV.

TITLE	SIZE	CODE	NUMBER	REV.
DATA PATHS (DPI) MEMORY AND DECODERS	D	CS	5410906-0-1	K
SCALE —	SHEET 2 OF 6		DIST.	

"THIS DRAWING AND SPECIFICATIONS, HEREIN, ARE THE PROPERTY OF DIGITAL EQUIPMENT CORPORATION AND SHALL NOT BE REPRODUCED OR COPIED OR USED IN WHOLE OR IN PART AS THE BASIS FOR THE MANUFACTURE OR SALE OF ITEMS WITHOUT WRITTEN PERMISSION.
COPYRIGHT © 1976 DIGITAL EQUIPMENT CORPORATION"

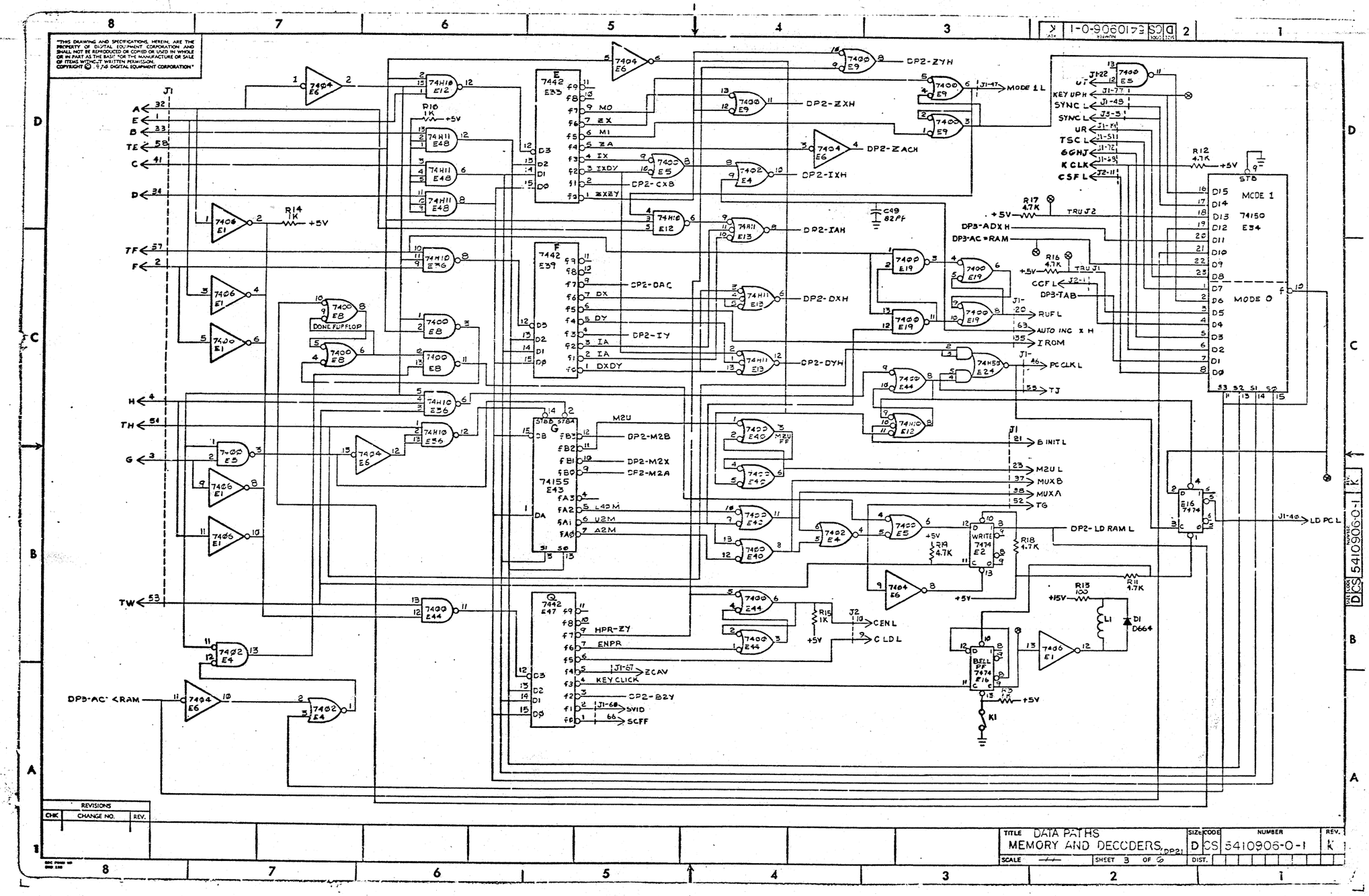

REVISIONS		
CHK	CHANGE NO.	REV.

TITLE	DATA PATHS MEMORY AND DECODERS (DP2)	SIZE	CODE	NUMBER	REV.
SCALE	SHEET 3 OF 9	D	DCS	5410906-0-1	K
		DIST.			

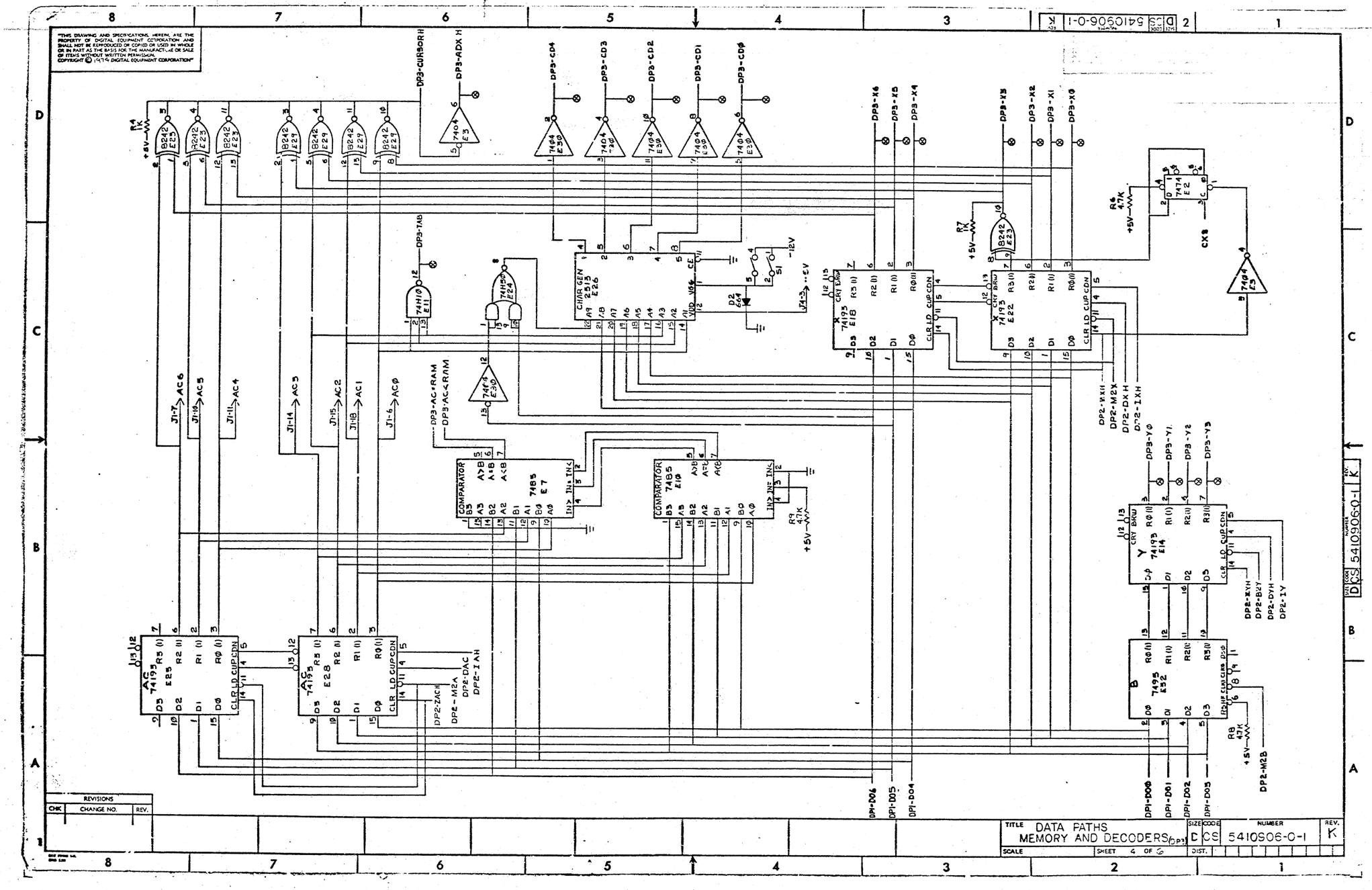
"THIS DRAWING AND SPECIFICATIONS, HEREIN, ARE THE PROPERTY OF DIGITAL EQUIPMENT CORPORATION AND SHALL NOT BE REPRODUCED OR COPIED OR USED IN WHOLE OR IN PART AS THE BASIS FOR THE MANUFACTURE OR SALE OF ITEMS WITHOUT WRITTEN PERMISSION.
COPYRIGHT © 1974 DIGITAL EQUIPMENT CORPORATION"
REVISIONS
CHK
CHANGE NO.
REV.
TITLE DATA PATHS
MEMORY AND DECODERS (DP3)
SIZE D
CODE CS
NUMBER 5410906-0-1
REV. K
SCALE
SHEET 4 OF 6
DIST.
5410906-0-1

"THIS DRAWING AND SPECIFICATIONS, HEREIN, ARE THE PROPERTY OF DIGITAL EQUIPMENT CORPORATION AND SHALL NOT BE REPRODUCED OR COPIED OR USED IN WHOLE OR IN PART AS THE BASIS FOR THE MANUFACTURE OR SALE OF ITEMS WITHOUT WRITTEN PERMISSION.
COPYRIGHT © 1974 DIGITAL EQUIPMENT CORPORATION"

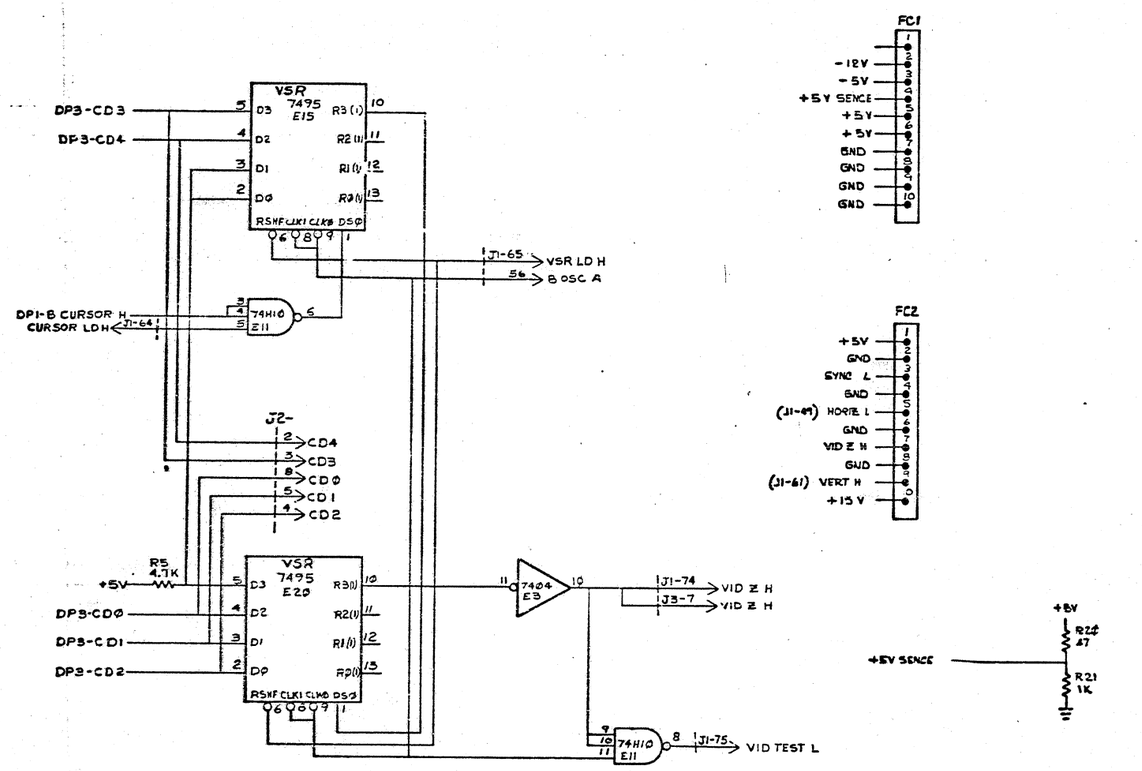

REVISIONS		
CHK	CHANGE NO.	REV.

TITLE	SIZE	CODE	NUMBER	REV.
DATA PATHS MEMORY AND DECODERS (DP4)	D	CS	5410906-0-1	K
SCALE	SHEET 5 OF 6	DIST.		

"THIS DRAWING AND SPECIFICATIONS, HEREIN, ARE THE PROPERTY OF DIGITAL EQUIPMENT CORPORATION AND SHALL NOT BE REPRODUCED OR COPIED OR USED IN WHOLE OR IN PART AS THE BASIS FOR THE MANUFACTURE OR SALE OF ITEMS WITHOUT WRITTEN PERMISSION
COPYRIGHT © 1975 DIGITAL EQUIPMENT CORPORATION"

WIRE TABLE

ITEM NO	DESCRIPTION AWG	COLOR	FROM CONNECTION	TO CONNECTION
40	22	BLK	———	FC1-1
		BRN	———	2
		RED	———	3
		ORN	———	4
		YEL	———	5
		GRN	———	6
		BLU	———	7
		VIO	———	8
		GRY	———	9
40		WHT	———	FC1-10
40		BLK	———	FC2-1
		BRN	———	2
		RED	———	3
		ORN	———	4
		YEL	———	5
		GRN	———	6
		BLU	———	7
		VIO	———	8
		GRY	———	9
40	22	WHT	———	FC2-10

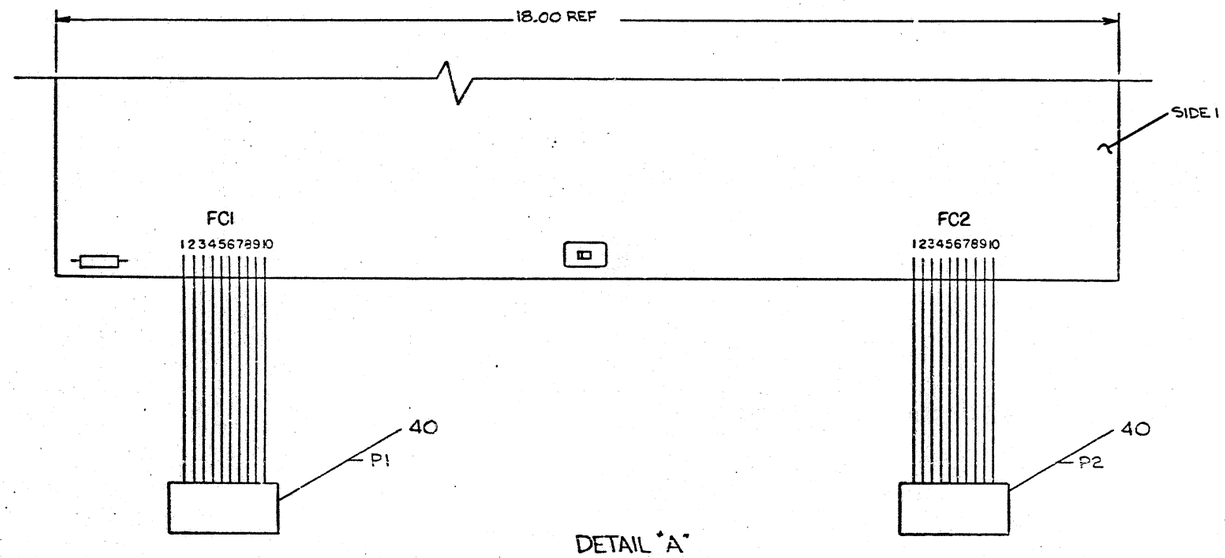

DETAIL "A"
SCALE: NONE

REVISIONS		
CHK	CHANGE NO	REV

TITLE	SIZE	CODE	NUMBER	REV.
DATA PATHS MEMORY AND DECODER	D	CS	5410906-0-1	K
SCALE	SHEET 6 OF 6	DIST.		

D CS 5410906-0-1 K

J2 SIDE 1
J1 SIDE 1
CH CUT
ADD WIRE
12.000 F.B.S.
PITCH CUT SIDE 1

REV	NUMBER	SIZE	CODE
M	54109[illegible]-0-6	B	MH

PRODUCT LINE VT50

DATE RELEASED 1-10-75

RELEASED BY M MORGENSTERN

MODULE ECO HISTORY

PAGE 1 OF 1

RELEASED CS REV. A

RELEASED ETCH BD REV. B

ECO. NO.	ORIGINATOR	DATE WRITTEN	NEW CS REV.	NEW ETCH BOARD REV.	IS IT MANDATORY TO REWORK ALL EARLIER VERSIONS (NOW AVAILABLE OR RETURNED FOR REPAIR) TO THIS REVISION LEVEL?			ARE ALL REVISIONS OF THIS MODULE COMPLETELY COMPATIBLE NOW (CAN BE MIXED INDISCRIMINATELY)?			SIMPLIFIED CHANGE DESCRIPTION	NO. PARTS ADDED	NO. PARTS DELETED
					YES	NO	CONDITIONAL (EXPLAIN)	YES	NO	CONDITIONAL (EXPLAIN)			
00001	MORGANSTERN	JAN. 27, 75	B	B		X		X			1. CIRCUIT CHANGED SO KEY CLICK RELAY STILL WORKS IF CONTACTS FAIL. 2. DOCUMENT CHANGES REQUIRED TO PRODUCE 54109906-1 THRU 54109906-3 VARIATIONS.	NONE	1
00002	MISITANO	JAN. 24, 75	C	B				X			MOVED KEYCLICK RELAY TO OPPOSITE SIDE OF BOARD	NONE	NONE
00003	BUZYNSKI	2-26-75	C	B		X		X			DELETE VARIATIONS 54109906-2 54109906-3	NONE	NONE
00004	DICKENSON	3-5-75	D			X		X			DOCUMENT CHANGES	0	0
00005	WHITTLESEY	4-25-75	E			X		X			ADD GND JUMPER	1	0
0005A	WHITTLESEY	5-8-75	—	—		X		X			CHG WIRE SIZE FROM #22 TO #18 GREEN	0	0
00006	NEUMANN	4-30-75	H	B		X		X			1. DELETE PIN 2, 24 PIN SOCKETS. 2. CORRECT CS SHEET 1 OF 5	0	2
00007	DICKENSON	3-25-75	J	C		X		X			NEW ETCH REV C. RESISTORS ADDED TO INCREASE +5V AND NOISE IMMUNITY	4	NONE
00008	WHITTLESEY	8-7-75	K	—		X		X			ADD CAP C48	1	0
0008A	WHITTLESEY	2-SEPT-75	L	—		X		X			CHG VALUE OF C49 TO 82PF.	1	1
00009	PUCCI	27-OCT-75	M			X		X			DOCUMENTATION CORRECTION	0	0

REVISIONS CHK	CHG NO	REV.
VA	00001	A
VA	00002	B
VA	00003	C
VA	00004	D
VA	00005	E
VA	0005A	F
VA	00006	H
VA	00007	J
VA	0008A	K
VA	00008	L
VA	00009	M

DRN. [illegible] DATE 1/10/75

CHK'D [illegible] DATE 1/10/75

ENG. [illegible] DATE 1-10-75

PROD. [illegible] DATE 1-10-75

EQUIPMENT CORPORATION
MAYNARD, MASSACHUSETTS

TITLE: MODULE ECO HISTORY

SIZE B | CODE MH | NUMBER 54109906-0-6 | REV. M

DEC 16-(32b)-1026-N971

DRB 104

THE DRAWINGS AND SPECIFICATIONS, HEREIN, ARE THE PROPERTY OF DIGITAL EQUIPMENT CORPORATION AND SHALL NOT BE REPRODUCED OR COPIED OR USED IN WHOLE OR IN PART AS THE BASIS FOR THE MANUFACTURE OR SALE OF ITEMS WITHOUT WRITTEN PERMISSION. COPYRIGHT © 1977, DIGITAL EQUIPMENT CORPORATION

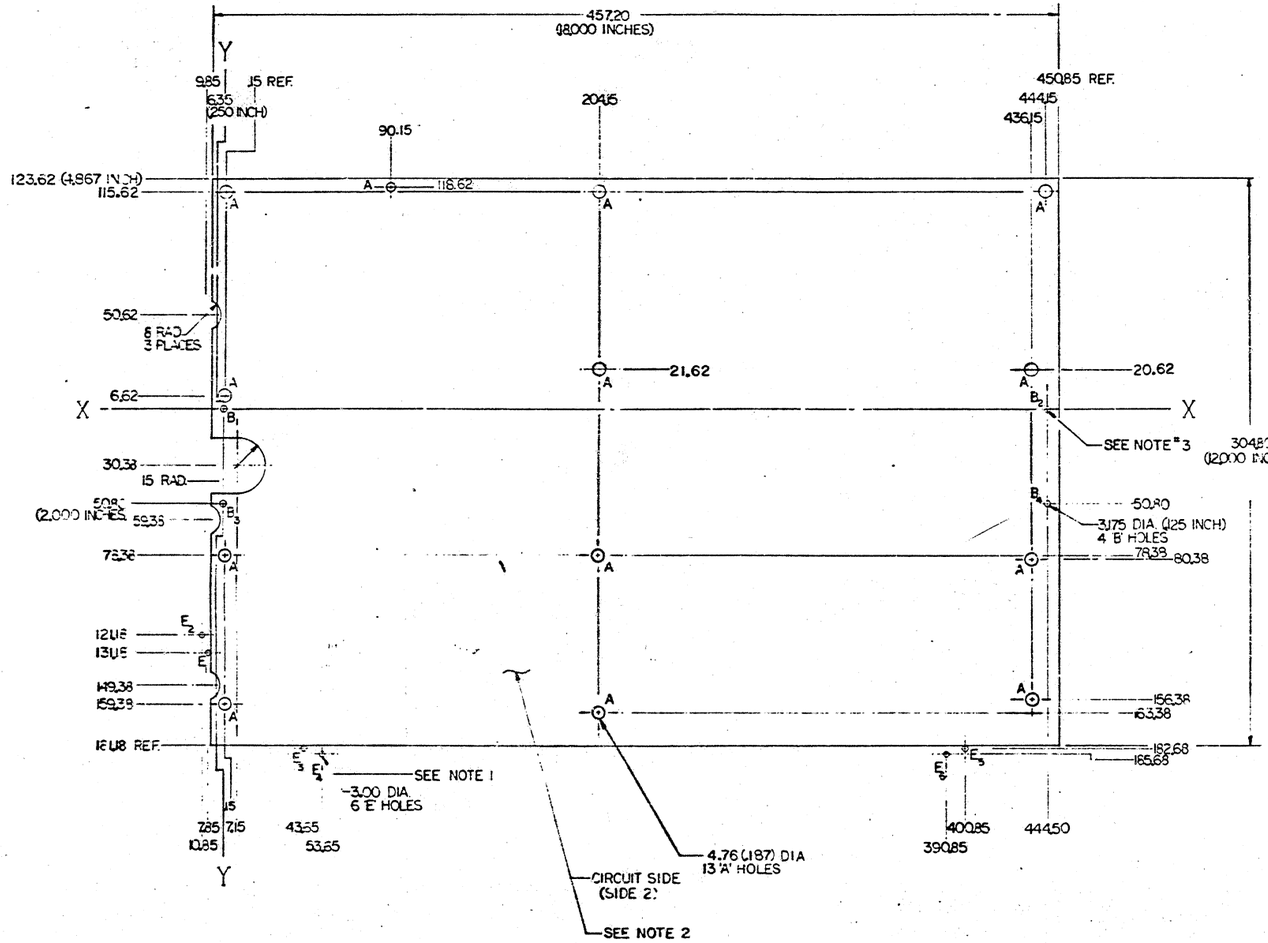

NOTES.

1. $_A$TOOL TO BE DESIGNED WITH ALL PINS, E, THRU E_4 INSTALLED.

   $_B$E, E_3 & E_5 TO BE SPRING LOADED RETRACTABLE.

   $_C$$E_2$, E_4, E_6 PINS USED WHEN SHEARING EDGES AND MUST BE FIXED PINS.

2. CIRCUIT SIDE IS COPPER CLAD SIDE. (ETCH SIDE OF BOARD, PUNCHING OF HOLES WILL BE FROM THIS SIDE TOWARD OPPOSITE SIDE.

3. PUT 3.175 (.125) DIA HOLES IN TOP & BOTTOM PLATE. DO NOT INSTALL PUNCHES IN B_1-B_2 DATUM.

METRIC DIMENSIONS

ITEM (#)	QTY.	DESCRIPTION	PART NO.
FIRST USED ON OPTION MODEL: VT 52		PARTS LIST	

DIMENSIONAL TOLERANCE
DIMENSIONS ARE MILLIMETRE / INCHES
UNLESS OTHERWISE SPECIFIED

SPLAY STEPS	NOMS	ANGLES
.XXX ±0.10	.XXX ±0.005	90° 30'
.XX ±0.25	.XX ±0.010	
.X ±0.5	.X ±0.3	

THIRD ANGLE PROJECTION

REMOVE BURRS AND BREAK SHARP CORNERS SURFACE QUALITY ✓

NEXT HIGHER ASSY.

MATERIAL —

FINISH —

DRN.	DATE
CHK'D.	DATE
ENG	DATE
APVD	DATE

digital

TITLE
PERIPHERAL
REAR PROCESSOR

B-DD-VT52-0-2

SIZE | CODE | NUMBER | REV.
B | MD | 9805550-0-0

SCALE

SHEET OF

DIST.

CHANGE NO. | REV.

REMOVE 9806360-0-0

THIS DRAWING AND SPECIFICATIONS, HEREIN, ARE THE PROPERTY OF DIGITAL EQUIPMENT CORPORATION AND SHALL NOT BE REPRODUCED OR COPIED OR USED IN WHOLE OR IN PART AS THE BASIS FOR THE MANUFACTURE OR SALE OF ITEMS WITHOUT WRITTEN PERMISSION.
COPYRIGHT © 1977 DIGITAL EQUIPMENT CORPORATION

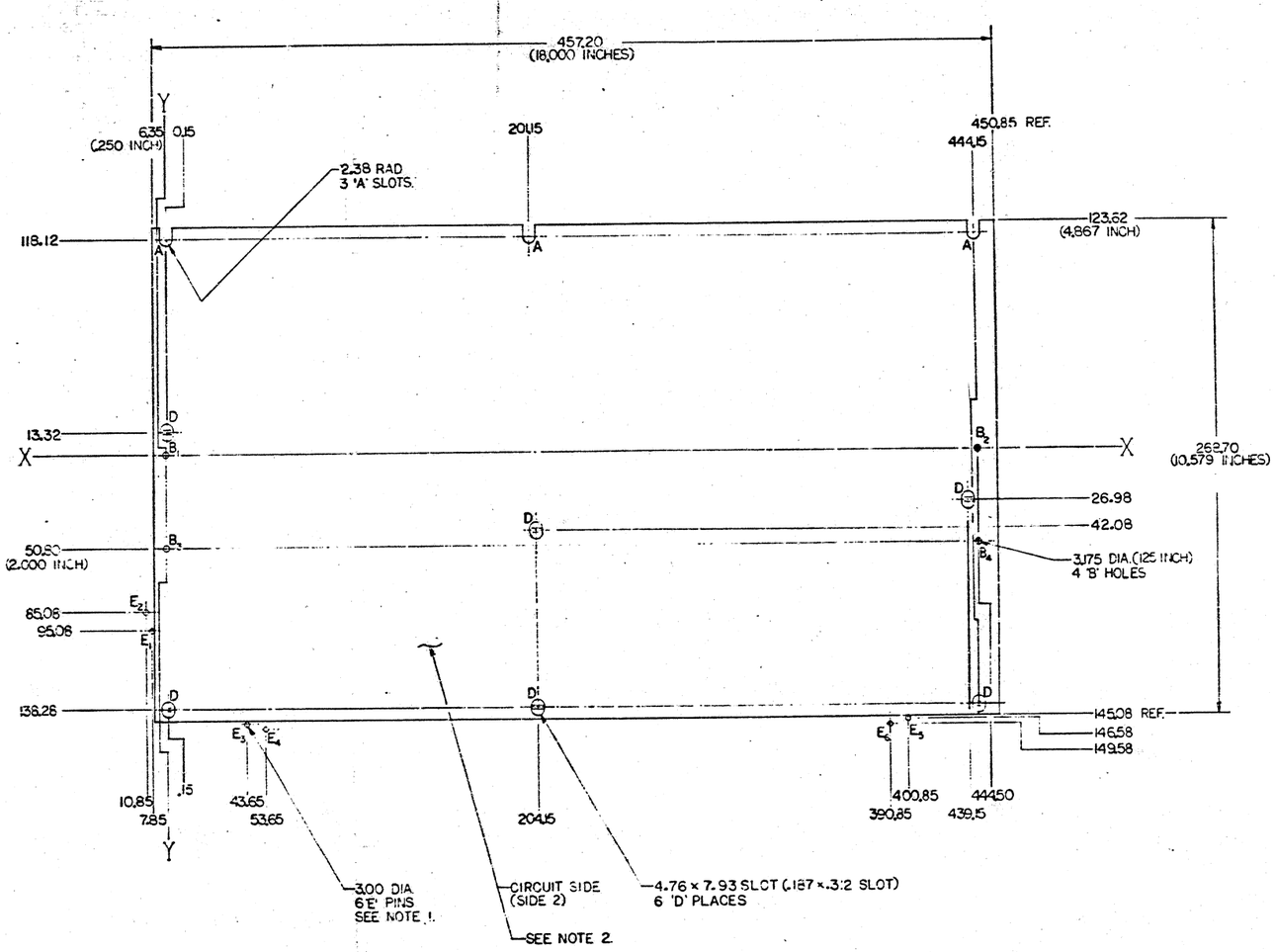

NOTES:

1. TOOL TO BE DESIGNED WITH ALL PINS E1 THRU E6 INSTALLED.
   1. PINS E1, E3, E4 TO BE SPRING LOADED RETRACTABLE.
   2. E2, E4 & E6 PINS USED WHEN SHEARING EDGES AND MUST BE FIXED PINS.
2. CIRCUIT SIDE IS COPPER CLAD SIDE (ETCH SIDE) OF BOARD, PUNCHING OF HOLES WILL BE FROM THIS SIDE TOWARD OPPOSITE SIDE.
3. PUT 3.175 (.125) DIA HOLES IN TOP AND BOTTOM PLATES. DO NOT INSTALL PUNCHES IN B1 & B2 DATUM HOLES.

METRIC DIMENSIONS

FIRST USED ON OPTION MODEL	QTY.	DESCRIPTION	PART NO.	ITEM NO.
VT 52		PARTS LIST		

DIMENSIONAL TOLERANCE	DRN.	DATE	digital
DIMENSIONS ARE MILLIMETERS / INCHES UNLESS OTHERWISE SPECIFIED	CHK'D.	DATE	
	ENG.	DATE	TITLE: PERIPHERY DIE FRONT PROCESSOR
MILLIMETERS / INCHES / ANGLES: XXX ± 0.10, XX ± 0.5, X ± 1.5; XXX ± 0.005, XX ± .02, X ± .1; ±0° 30'	APVD.	DATE	
THIRD ANGLE PROJECTION	PROJ.	DATE	
REMOVE BURRS AND BREAK SHARP CORNERS SURFACE QUALITY ✓	NEXT HIGHER ASSY.		
MATERIAL —	B-00-VT50-0-0	SIZE / CODE: E / 17D	NUMBER: 9606361-0-0 REV.
FINISH —	SCALE 1/1	SHEET 1 OF 1	DIST

CHANGE NO. REV. CHK.

MCU 9606361-0-0 SERIES

"THIS DRAWING AND SPECIFICATIONS HEREIN ARE THE PROPERTY OF DIGITAL EQUIPMENT CORPORATION AND SHALL NOT BE REPRODUCED OR COPIED OR USED IN WHOLE OR IN PART AS THE BASIS FOR THE MANUFACTURE OR SALE OF ITEMS WITHOUT WRITTEN PERMISSION. COPYRIGHT © 1974, DIGITAL EQUIPMENT CORPORATION"

HOLE LEGEND

HOLE	SIZE	QTY
A	12 X 15 SLOT	2
B	12 DIA	1
C	3.175 DIA	4
D	4.8 DIA	2
E	8.00 DIA	9
F	3.26 DIA	2
H	4.0 DIA	4

NOTES:

1A TOOL TO BE DESIGNED WITH ALL PINS E1 THRU E6 INSTALLED.

1B PINS E1, E3, AND E5 TO BE SPRING LOADED RETRACTABLE, USED WHEN NOT SHEARING EDGES.

1C E2, E4, & E6 PINS USED WHEN SHEARING EDGES, TO BE FIXED DOWEL PINS.

2 CIRCUIT SIDE IS COPPER CLAD SIDE (ETCH SIDE) OF BOARD. PUNCHING OF HOLES WILL BE FROM THIS SIDE TOWARD OPPOSITE SIDE.

3 FOR REV D PC BOARD.

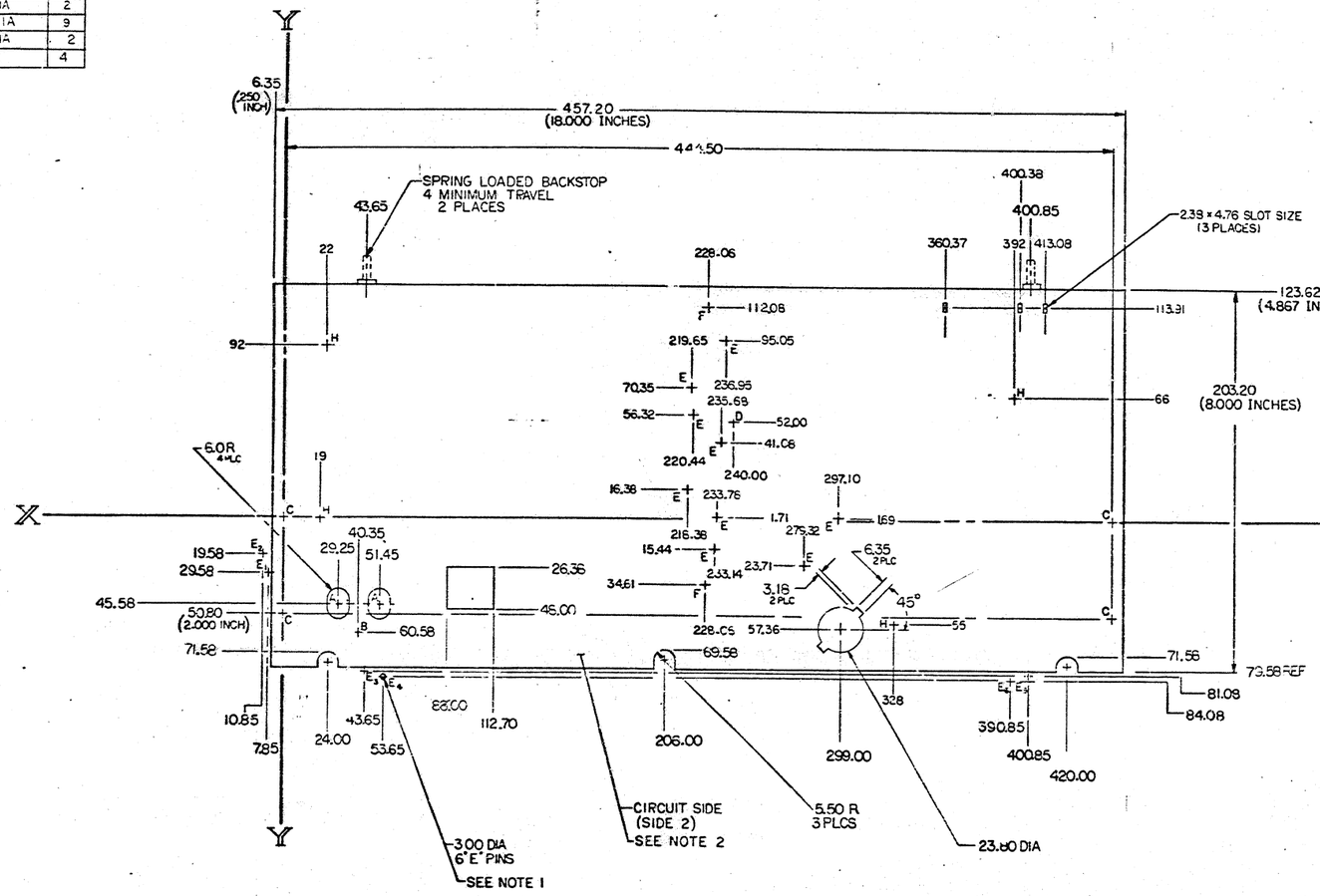

METRIC DIMENSIONS

FIRST USED ON OPTION/MODEL	QTY.	DESCRIPTION	PART NO.	ITEM NO.
VT50		PARTS LIST		

DIMENSIONAL TOLERANCE: DIMENSIONS ARE MILLIMETERS / INCHES UNLESS OTHERWISE SPECIFIED

MILLIMETERS	INCHES	ANGLES
X.XX ±1.0	X.XX ±.005	45° 30'
X.X ±0.5	X.X ±.02	
X ±1.2	X ±.1	

THIRD ANGLE PROJECTION

REMOVE BURRS AND BREAK SHARP CORNERS SURFACE QUALITY

MATERIAL

FINISH

DRN. DATE

CHK'D. DATE

ENG. DATE

PROJ. ENG. DATE

PROD. DATE

NEXT HIGHER ASSY. B-DD-VT50-0-0

SCALE 1/1

SHEET 1 OF 1

digital

TITLE PERIPHERY DIE, PWR SUP/MONITOR

SIZE E CODE MD NUMBER 9606362-0-0 REV. A

D ST

MARK MARSTEIN

CHK. CHANGE NO. REVISION REV.

MD 9606362-0-0 A

"THIS DRAWING AND SPECIFICATIONS, HEREIN, ARE THE PROPERTY OF DIGITAL EQUIPMENT CORPORATION AND SHALL NOT BE REPRODUCED OR COPIED OR USED IN WHOLE OR IN PART AS THE BASIS FOR THE MANUFACTURE OR SALE OF ITEMS WITHOUT WRITTEN PERMISSION.
COPYRIGHT © 1975 - DIGITAL EQUIPMENT CORPORATION"

WIRE TABLE

ITEM NO	DESCRIPTION AWG	COLOR	FROM CONN	TO CONN
1	22	WHT	P1-1	———
		GRY	P1-2	———
		VIO	P1-3	———
		BLU	P1-4	———
		GRN	P1-5	———
		YEL	P1-6	———
		ORN	P1-7	———
		RED	P1-8	———
		BRN	P1-9	———
1	22	BLK	P1-10	———

NOTES:

1. USE TIEWRAP (X) ITEM #4 AT APPROX. CENTER OF CABLE.
2. CUT BOTH ENDS OF CABLE TO 9.5 MM RADIUS AS SHOWN.
3. STRIP BACK INSULATION 4 MM ON BOTH ENDS.

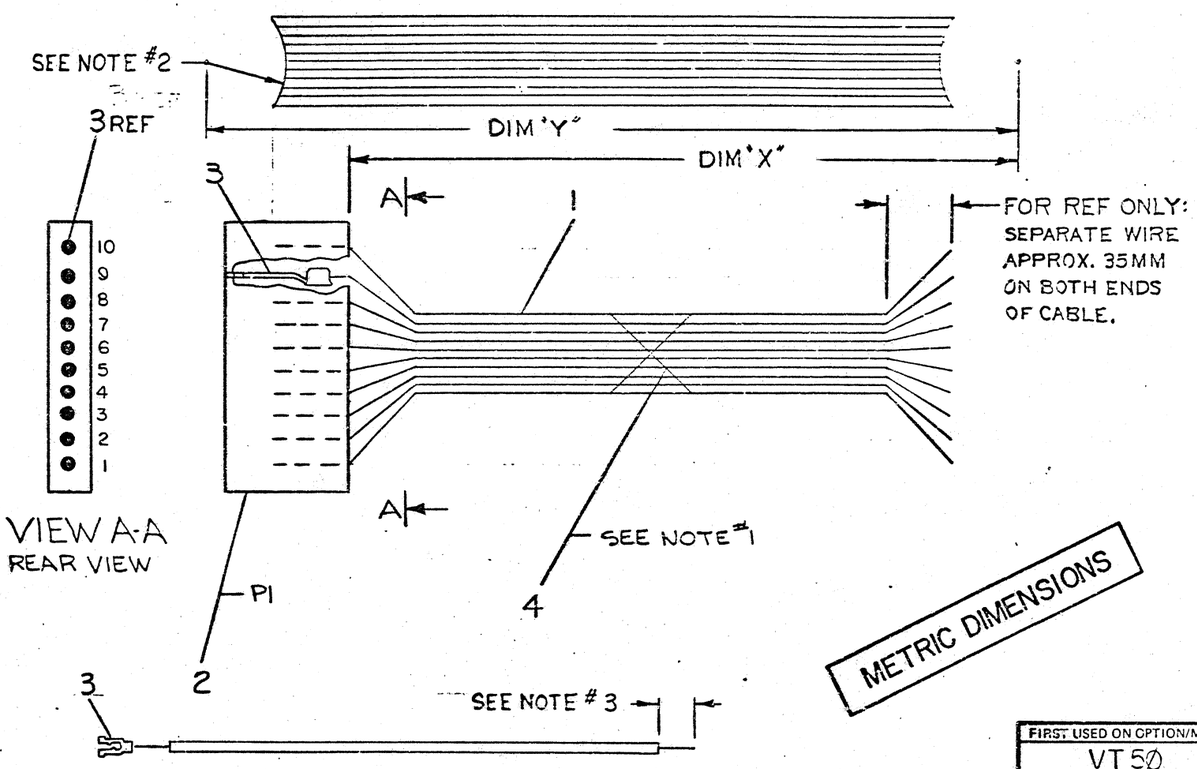

NUMBER	DIM "X"	DIM "Y" (PRECUT)
7011144-0-D	134 MM ± 5 MM	150 MM ± 5 MM

METRIC DIMENSIONS

QTY.	DESCRIPTION	PART NO.	ITEM NO.
1	TIEWRAP	9007031	4
10	CONTACT, CABLE	9009609-00	3
1	HOUSING, CONN 10 PIN	1211355-01	2
A/R	CABLE, RIBBON	9107575-00	1

PARTS LIST

FIRST USED ON OPTION/MODEL: VT50

UNLESS OTHERWISE SPECIFIED DIMENSION IN INCHES
TOLERANCES
DECIMALS: .XXX = .005, .XX = .02, .X = .1
ANGLES: ±0° 30'
REMOVE BURRS AND BREAK SHARP CORNERS SURFACE QUALITY √

		DATE
DRN.	G. Hay	4/7/75
CHK'D.		DATE 4/8/75
ENG.		DATE 4/9/75
PROJ. ENG.		DATE 4/9/75
PROD.		DATE 5/26/75

MATERIAL: SEE PARTS LIST
FINISH
NEXT HIGHER ASSY.: D-CS-5410906-0-1
SCALE
SHEET 1 OF 1

digital EQUIPMENT CORPORATION MAYNARD MASSACHUSETTS

TITLE: CABLE ASSY MEMORY & DECODER

SIZE	CODE	NUMBER	REV.
C	AD	7011144-0-0	A

DIST.

REVISIONS			
	CHANGE NO.	CHK	REV.
1	7011144-00001	M.WHITTLESEY	A

DEC FORM NO. DRC 100-B

SIZE C CODE AD NUMBER 7011144-0-0 REV. A

THIS DRAWING AND SPECIFICATIONS, HEREIN, ARE THE PROPERTY OF DIGITAL EQUIPMENT CORPORATION AND SHALL NOT BE REPRODUCED OR COPIED OR USED IN WHOLE OR IN PART AS THE BASIS FOR THE MANUFACTURE OR SALE OF ITEMS WITHOUT WRITTEN PERMISSION.
COPYRIGHT © 1976 DIGITAL EQUIPMENT CORPORATION

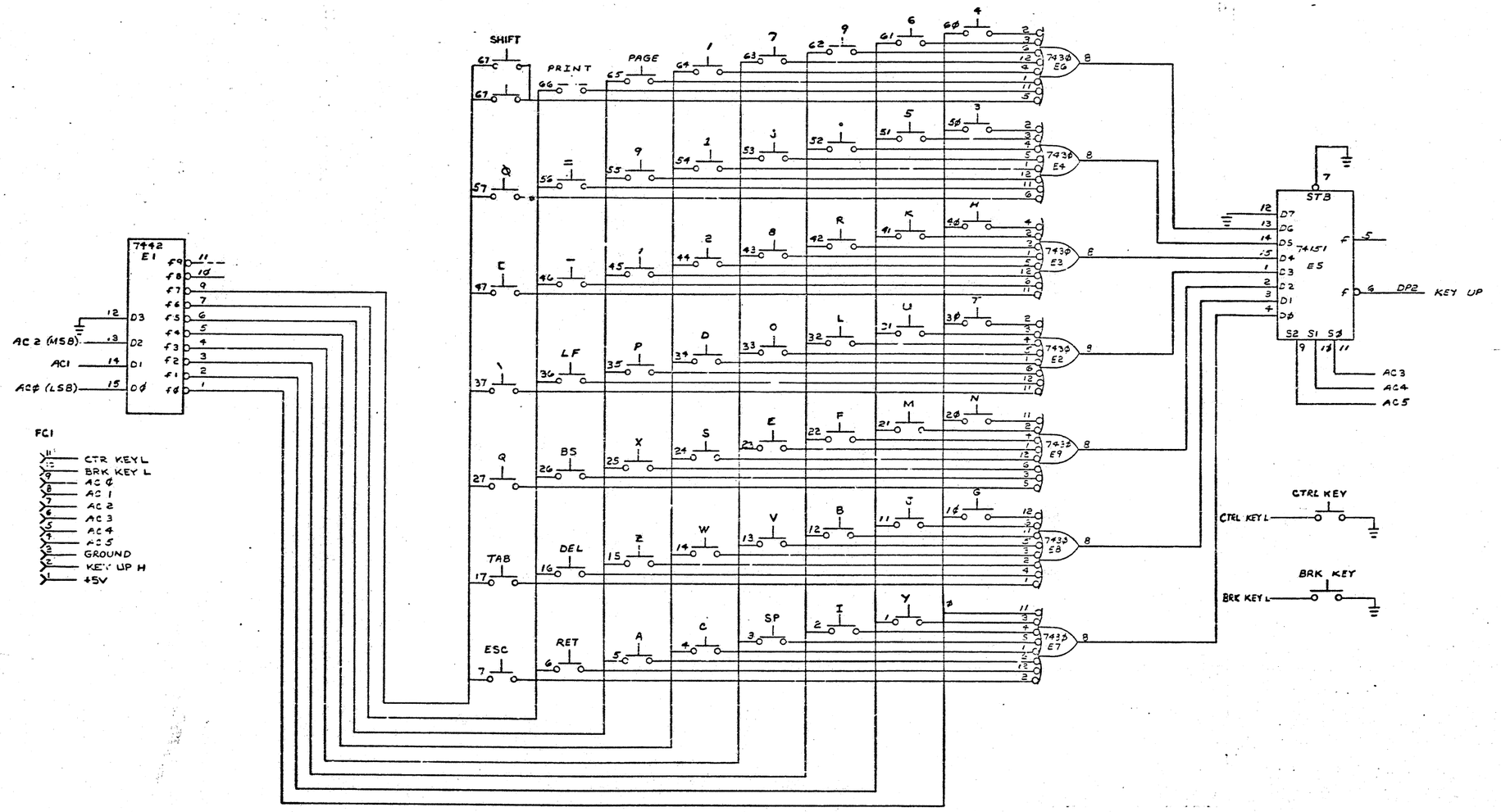

REVISIONS		
CHK	CHANGE NO	REV

TITLE	SIZE	CODE	NUMBER	REV
KEYBOARD A VT50	D	CS	5410893-0-1	F
SCALE	SHEET 2 OF 4	DIST.		

DC5410893-0-1 F

"THIS DRAWING AND SPECIFICATIONS HEREIN ARE THE PROPERTY OF DIGITAL EQUIPMENT CORPORATION AND SHALL NOT BE REPRODUCED OR COPIED OR USED IN WHOLE OR IN PART TO THE BASIS FOR THE MANUFACTURE OR SALE OF ITEMS WITHOUT WRITTEN PERMISSION
COPYRIGHT © 1975 DIGITAL EQUIPMENT CORPORATION"

WIRE TABLE

ITEM NO	DESCRIPTION AWG	COLOR	FROM CONN	WITH	TO CONN	WITH	REMARKS
12	22	BLK	P1-1	—	FC1-1	SOLDER	+5V
		BRN	P1-2	—	FC1-2		KEY UP H
		RED	P1-3	—	FC1-3		GND
		ORN	P1-4	—	FC1-4		AC5
		YEL	P1-5	—	FC1-5		AC4
		GRN	P1-6	—	FC1-6		AC3
		BLU	P1-7	—	FC1-7		AC2
		VIO	P1-8	—	FC1-8		AC1
		GRY	P1-9	—	FC1-9		AC0
		WHT	P1-10	—	FC1-10		BRK KEY
12	22	BLK	P1-11	—	FC1-11	SOLDER	CTRL KEY

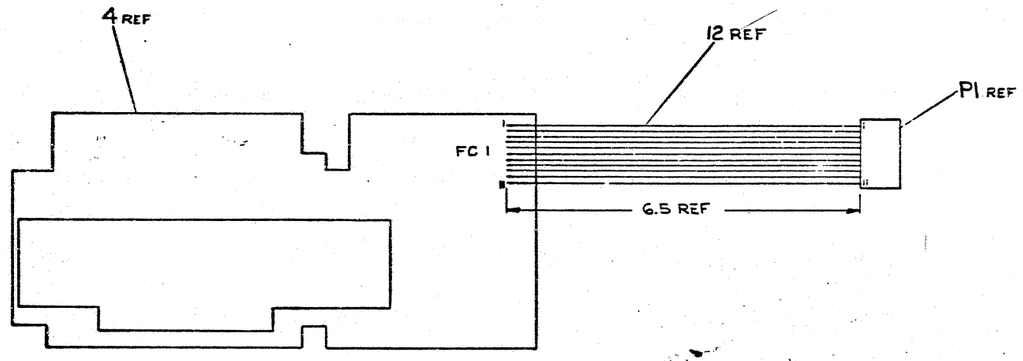

REVISIONS		
CHK	CHANGE NO	REV

TITLE	SIZE	CODE	NUMBER	REV.
KEYBOARD, VT50	D	CS	5410893-0-1	
SCALE	SHEET 3 OF 4	DIST.		

D CS 5410893-0-1 F

"THIS DRAWING AND SPECIFICATIONS, WHICH ARE THE PROPERTY OF DIGITAL EQUIPMENT CORPORATION, AND SHALL NOT BE REPRODUCED OR COPIED OR USED IN WHOLE OR IN PART AS THE BASIS FOR THE MANUFACTURE OR SALE OF ITEMS, WITHOUT WRITTEN PERMISSION.
COPYRIGHT ©1975 DIGITAL EQUIPMENT CORPORATION"

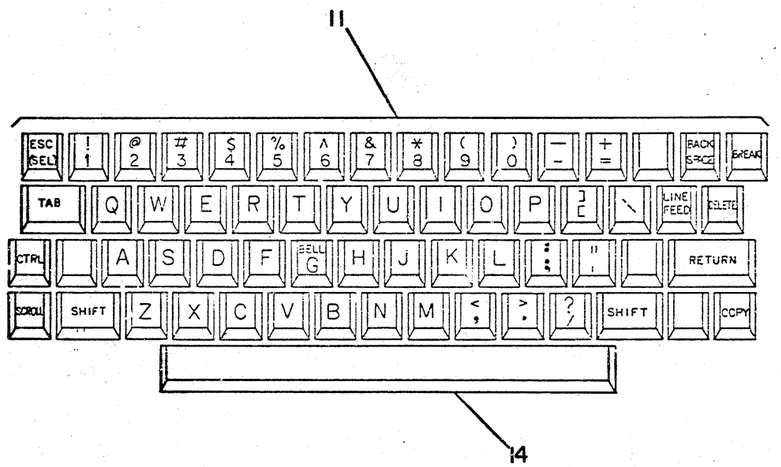

REVISIONS		
CHK	CHANGE NO	REV

TITLE	SIZE	CODE	NUMBER	REV.
KEYBOARD, VT50	D	CS	5410893-0-1	F
SCALE —/—/— SHEET 4 OF 4	DIST.			

DCS 5410893-0-1 F

JUMPER TABLE

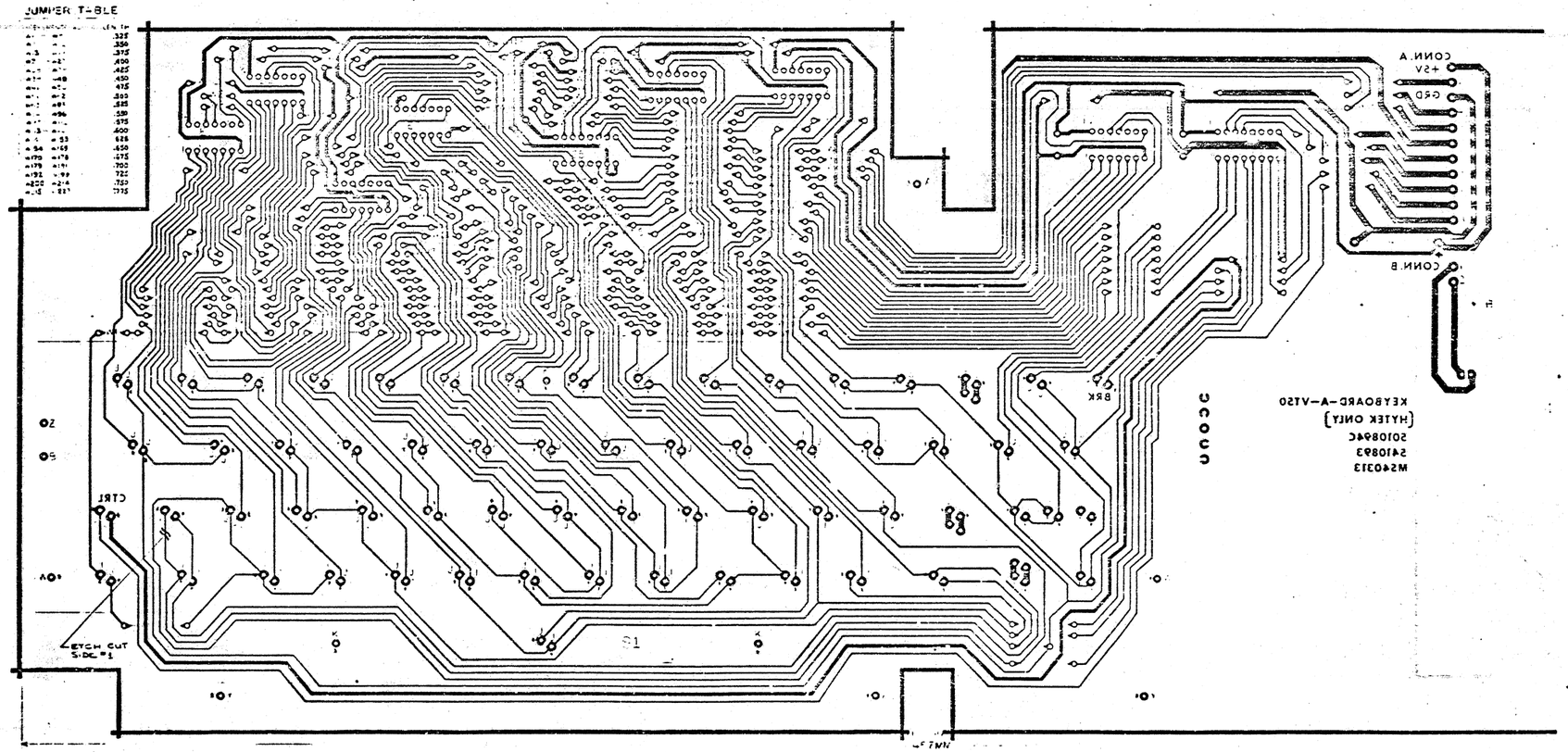

NOTES:

1. UNLESS NOTED ARE ±.010 GRID.
2. ALL DIMENSIONS IN INCHES UNLESS OTHERWISE NOTED SHOWN IN MILLIMETERS.
3. ENGRAVE WITH SUPPLY BLANK MATERIAL.
4. SEE D.A. DRAWING FOR COMPONENT BOARD DIMENSIONS.
5. BK. MARKING NAME BY CINCINNATI MILACRON.
6. BK. MATERIAL VAULCA REINFORCED EPOXY GLASS.
7. ALL HOLES ARE STATISTICALLY LOCATED HOLES TO ACCOMMODATE
8. BOARD ASSEMBLY TO BE PERFORMED AS SHOWN IN
9. DO NOT DIGITIZE "B" HOLES.

DRILLING DATA

HOLE LETTER	FOR PTH BOARDS: DRILL SIZES BEFORE PLATE	FOR PTH BOARDS: DRILL SIZES AFTER PLATE	FOR NON-PTH BOARDS	CAN TAKE GRIPLETS YES	CAN TAKE GRIPLETS NO	QTY OF HOLES
NONE		X	.031 (.063)			
A		X	.111			
M		X	.134 (.185)			
L		X	.144 (.197)			
Y		X	.144 X .191 (.19			
J		X	.052 (.086)			16
B		X	.115 (.159)			2

BOARD FABRICATION INFORMATION

BOARD SIZE 5.500 X 15.000

BOARD MATERIAL [illegible]

EYELET PLATED THRU

/ SIDED / MULTI-LAYER

NOTCH BEFORE GOLD PLATING

NOTCH AFTER GOLD PLATING

digital EQUIPMENT CORPORATION

MAYNARD, MASS.

SIZE E | DWG NO AH 3410893-0-5 | REV F

STOCK REV C

MS

PRODUCT LINE VT 50

DATE RELEASED 1-10-75

RELEASED BY M MORGANSTERN

MODULE ECO HISTORY

PAGE 1 OF 1

RELEASED CS REV B

RELEASED ETCH BD REV C

ECO. NO.	ORIGINATOR	DATE WRITTEN	NEW CS REV.	NEW ETCH BOARD REV.	IS IT MANDATORY TO REWORK ALL EARLIER VERSIONS (NOW AVAILABLE OR RETURNED FOR REPAIR) TO THIS REVISION LEVEL? YES	NO	CONDITIONAL (EXPLAIN)	ARE ALL REVISIONS OF THIS MODULE COMPLETELY COMPATIBLE NOW (CAN BE MIXED INDISCRIMINATELY)? YES	NO	CONDITIONAL (EXPLAIN)	SIMPLIFIED CHANGE DESCRIPTION	NO. PARTS ADDED	NO. PARTS DELETED
00001	MORGANSTERN	FEB. 3, 75	C	—		X			X		KEYCAPS CHANGE TO COLORED SET	—	—
00002	DICKENSON	FEB. 13, 75	D	—		X		X			ADD CABLE TO PRINT	1	1
00003	DICKENSON	MAR. 4, 75	E	—		X			X		VARIATION ADDED	0	0
00004	D. COLMAN	MAR. 24, 75	F	—		X			X		CUT ETCH	0	0
00005	DICKENSON	AUG. 5 75	H	D		X		X			NEW ETCH REV ADDED	0	0

REVISIONS CHG	CHG NO.	REV.
V.A.	00001	A
V.A.	00002	B
V.A.	00003	C
V.A.	00004	D
V.A.	00005	E

DRN.		DATE 1-10-75
CHK'D		DATE 1-10-75
ENG.		DATE 1-10-5
PROD.		DATE 1-10-5

EQUIPMENT CORPORATION
MAYNARD, MASSACHUSETTS

TITLE: MODULE ECO HISTORY

SIZE	CODE	NUMBER	REV.
B		MM-5410893-0-6	F

DEC 10-(320)-1026-N971

DRB 104

THIS DRAWING AND SPECIFICATIONS, HEREIN, ARE THE PROPERTY OF DIGITAL EQUIPMENT CORPORATION AND SHALL NOT BE REPRODUCED OR COPIED OR USED IN WHOLE OR IN PART AS THE BASIS FOR THE MANUFACTURE OR SALE OF ITEMS WITHOUT WRITTEN PERMISSION.
COPYRIGHT © 1975, DIGITAL EQUIPMENT CORPORATION

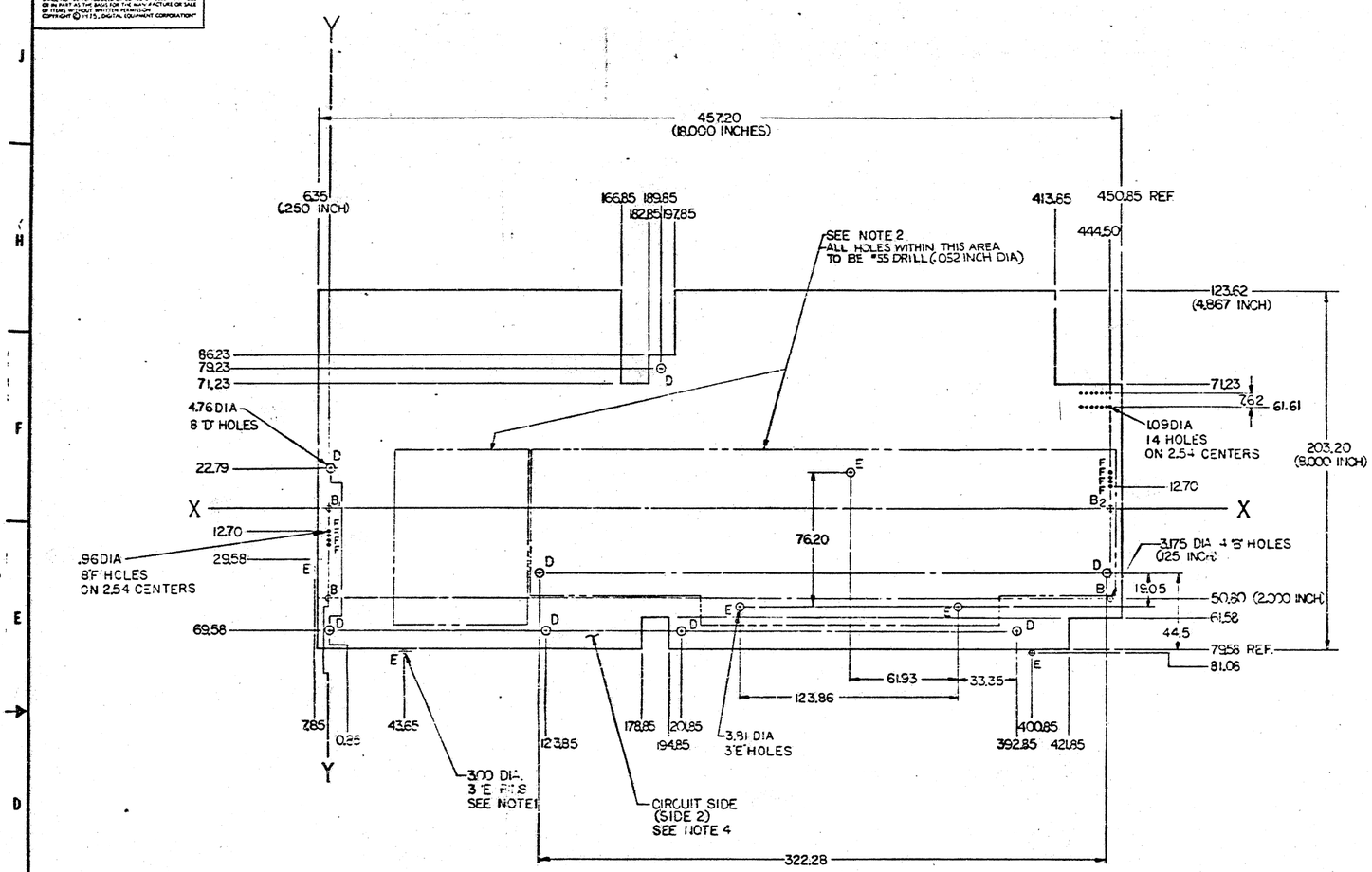

NOTES:

1. PUT 3.175 DIA (.125 INCH) HOLES IN TOP AND BOTTOM PLATES. DO NOT INSTALL PUNCHES IN B_1 & B_2 DATUM HOLES.
2. REFER TO ARTWORK FOR KEYTAB SWITCH HOLE LOCATION DATA. BOI 169-H
3. 'E' PINS ARE USED WHEN SHEAR IS EDGES AND MUST BE FIXED PINS
4. CIRCUIT SIDE IS COPPER CLAD SIDE (ETCH SIDE) OF BOARD. PUNCHING OF HOLES WILL BE FROM THIS SIDE TOWARD OPPOSITE SIDE.

METRIC DIMENSIONS

FIRST USED ON OPTION/MODEL: VT 50	QTY.	DESCRIPTION	PART NO.
PARTS LIST			

DIMENSIONAL TO FRANCE
DIMENSIONS ARE MILLIMETERS / INCHES
UNLESS OTHERWISE SPECIFIED

MILLIMETERS	INCHES	ANGLE
X.XX ±0.10	.XXX ±0.005	±0° 30'
X.X ±0.05	.XX ±0.02	
X ±0.2	.X ±0.1	

THIRD ANGLE PROJECTION

REMOVE BURRS AND BREAK SHARP CORNERS. SURFACE QUALITY ✓

MATERIAL —
FINISH —

DRN. — DATE 5-27-75
CHK'D. — DATE
ENG. — DATE 5-27-75
PROJ. ENG. — DATE
PROD. — DATE
NEXT HIGHER ASSY.

digital

TITLE: PERIPHERY DIE
HYTEC KEY ARRAY

SIZE: B | CODE: MD | NUMBER: 9606359-0-0 | REV.: C

SCALE: 1:1
SHEET: OF

DIST.

9606359-0-0 C

"THIS DRAWING AND SPECIFICATIONS, HEREIN, ARE THE PROPERTY OF DIGITAL EQUIPMENT CORPORATION AND SHALL NOT BE REPRODUCED OR COPIED OR USED IN WHOLE OR IN PART AS THE BASIS FOR THE MANUFACTURE OR SALE OF ITEMS WITHOUT WRITTEN PERMISSION. COPYRIGHT © 1975 DIGITAL EQUIPMENT CORPORATION"

WIRE TABLE

ITEM NO	DESCRIPTION AWG	COLOR	FROM CONNECTION	FROM WITH	TO CONNECTION	TO WITH	REMARKS
3	22	BLACK			P1-1	4	
		BROWN			P1-2		
		RED			P1-3		
		ORANGE			P1-4		
		YELLOW			P1-5		
		GREEN			P1-6		
		BLUE			P1-7		
		VIOLET			P1-8		
		GRAY			P1-9		
3		WHITE			P1-10		
5	22	BLUE			P1-11	4	

LEGEND

NUMBER	DIM "X" VARIATION	DIM "Y" PRECUT
7010912-0H	6.75 INS	8.0 INS

NOTES:

1. USE TIE WRAP (X) ITEM #2 1.5 INS FROM KEYBOARD END OF CABLE.
2. USE TIE WRAP (X) ITEM #2 1.0 INS FROM P1 END OF CABLE

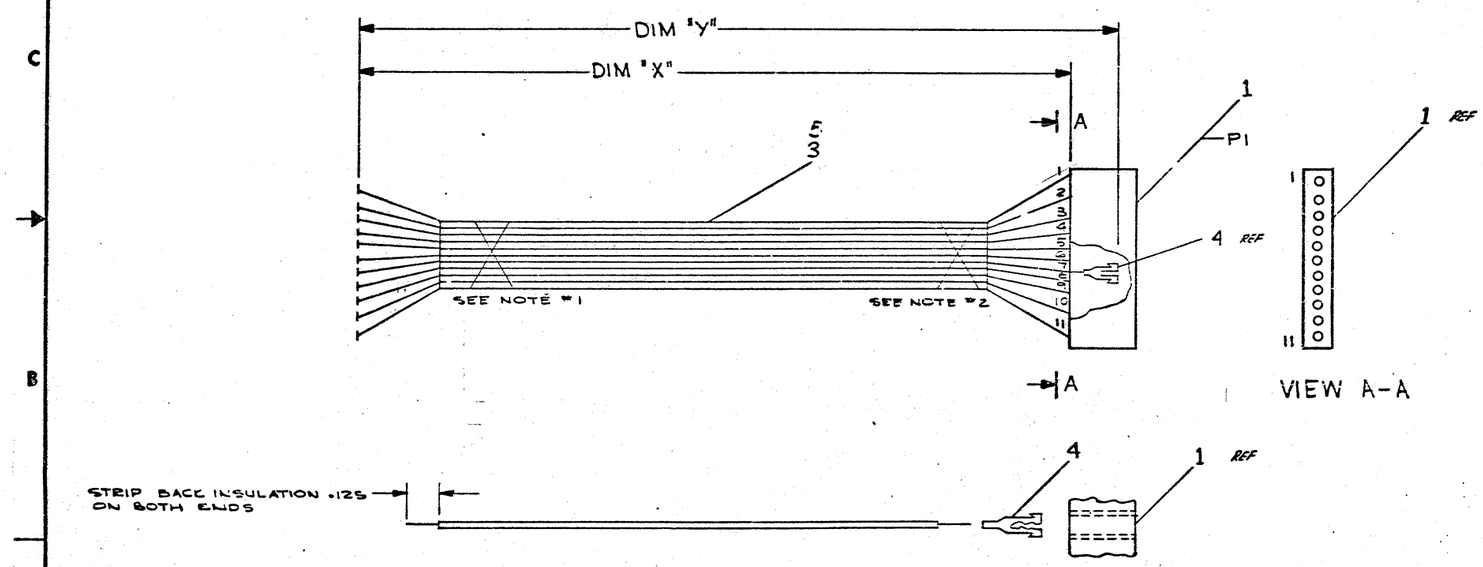

A/R	WIRE, STRND, #22 AWG	917350-66	5
11	CONTACT RECP.	90C1609	4
A/R	CABLE R BRON 20COND #22 AWG	9107575	3
2	TIE WRAP - 1.5M	9007880	2
1	CONN. RECP HOUSING 11PN	211955	1
	DESCRIPTION	DWG PART NO.	ITEM NO

* UNLESS OTHERWISE SPECIFIED DIMENSIONS ARE IN INCHES

ANGLES ±0°30'	CLASS OF ACCURACY (CHECK ONE)	NOMINAL DIMENSION RANGE INCHES					
SURFACE QUALITY IN MICROINCHES		OVER 0 TO 0.2	OVER 0.2 TO 1.2	OVER 1.2 TO 4.0	OVER 4.0 TO 12.0	OVER 12.0 TO 40.0	OVER 40.0 TO 80.0
	MEDIUM	±.004	±.008	±.012	±.016	±.024	±.04
	PREFERRED	±.012	±.016	±.025	±.04	±.063	±.1

QUANTITY & VARIATION

THIRD ANGLE PROJECTION

REMOVE BURRS AND BREAK SHARP CORNERS

DO NOT SCALE DWG

MATERIAL SEE PARTS LIST

FINISH

DRN [illegible]
CHK'D.
ENG.
PROJ. ENG.
PROD.
NEXT HIGHER ASSY.
[illegible]-84 1170-0-1
SCALE
SHEET 1 OF 1

FIRST USED ON VT-2H

digital

TITLE KEYBOARD CABLE VT51/VT50H (VT50H CABLE)

SIZE D | CODE 1A | NUMBER 7010912-0-0 | REV. A

DIST.

REVISIONS

CHK	CHANGE NO.	REV.
	7010912-00001	A

J BUZYNSKI

SIZE D | CODE 1A | NUMBER 7010912-0-0 | REV. A

ECC FORM NO. BRD 100-C

"THIS DRAWING AND SPECIFICATIONS, HEREIN, ARE THE PROPERTY OF DIGITAL EQUIPMENT CORPORATION AND SHALL NOT BE REPRODUCED OR COPIED OR USED IN WHOLE OR IN PART AS THE BASIS FOR THE MANUFACTURE OR SALE OF ITEMS WITHOUT WRITTEN PERMISSION. COPYRIGHT © 1975 DIGITAL EQUIPMENT CORPORATION"

NOTES:

1. OPTIONAL JUMPERS SEE SHEET 2 FOR CONFIGURATION TABLE.
2. SEE SHEET 3 OF 4 FOR WIRE TABLE.
3. SEE SHEET 4 OF 4 FOR VT50H/VT50J KEYCAP PLACEMENT.
4. NOTE THAT THE B.O.M. FOR BOTH VARIATIONS (-0 AND -2) OF THIS BOARD MAY REQUIRE UPDATING ON ANY ECO.

VARIATION EXPLANATION

VARIATION	COMMENT
5411170-0	THIS VARIATION IS NOT PRESENTLY USED
5411170-1	HEAT CYCLED, SYSTEM TESTED 5411170-0
5411170-2	BASIC VT50H
5411170-3	HEAT CYCLED, SYSTEM TESTED 5411170-2

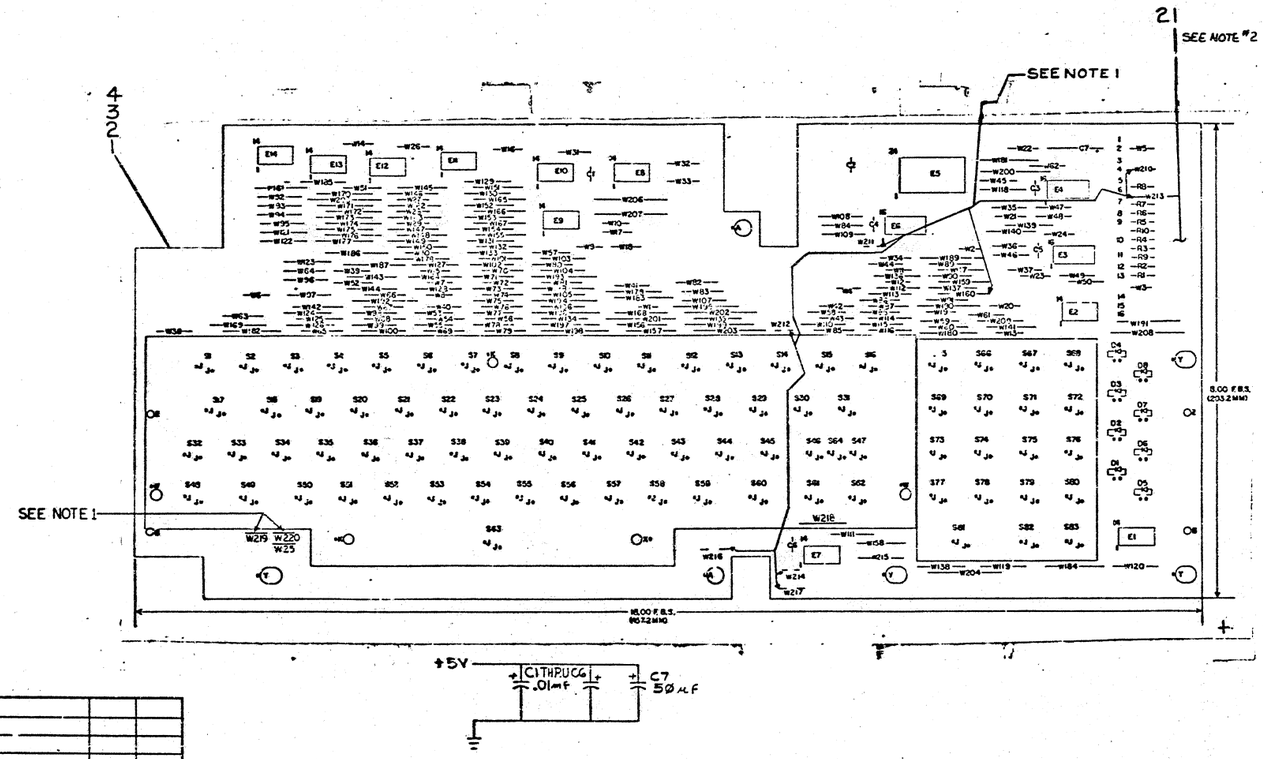

5411170-2	5411170-0				
REF	REF		X-Y COORDINATE HOLE LOCATION	K-CO-5411170-0-4	1
REF	REF		ASS'Y/DRILLING HOLE LAYOUT	E-AH-5411170-0-5	2
REF	REF		MODULE ECO HISTORY	B-MH-5411170-0-6	3
1	1		ETCH CIRCUIT BOARD	5011169	4
6	6	C1-C6	CAP. .01μf 100V, 20% DISC	1001610-01	5
1	1	C7	CAP. 50μf, 25V	1001796	6
1	-	63 KEY ARRAY	HITEK KEYCAPS (1SET)	1212287 C5	7
1	-		KEYCAP (REPEAT)	1212287-43	8
1	1		SPACE BAR, BLUE	1211857-01	9
1	-	19 KEY ARRAY	HITEK KEYCAPS (1SET)	1212287-D0	10
-	8	D1-D8	DIODE MV5054-1 LED	1110324	11
-	2	R9-R10	RES. 1K, 1/4W, 5%	1300365	12
-	8	R1-R8	RES 330, 1/4W, 5%	1300295	13
1	1	E6	IC DEC 7442	1910046	14
1	1	E5	IC DEC 74150	1910153	15
10	10	E1, E2, E7-E14	IC DEC 7430	1905578	16
-	2	E3, E4	IC DEC 74175	1910651	17
1	1	S1-S63	63 KEY SWITCH ASS'Y	7009892	18
1	1	S65-S83	19 KEYSWITCH ASS'Y	7009890	19
218	218	W1-W210, W212-W218, W220	REEL JUMPER	9107560-/	20
1	-		CABLE KEYBOARD VT50/VT50H	D-IA-7010412-0-0	21

PARTS LIST

QTY	REF. DESIGNATION	DESCRIPTION	PART NO.	ITEM NO.

FIRST USED ON OPTION MODEL: VT51/VT50

ETCH BOARD REV. C

IC TYPE	GND	+5V
DEC IC 7442	8	16
DEC IC 74175	8	16
DEC IC 74150	12	24

GND AND 5V ARE USUALLY PIN 7 AND 14 RESPECTIVELY EXCEPTIONS ARE STATED ABOVE

IC PIN LOCATIONS

J. BUZYNSKI 10-18-75
H. Sunamora 5-5-75
5411170-00001 B
ORIGINATED A
CHK | CHANGE NO. | REV.
REVISIONS

DEC NO.	EIA NO.	DEC NO.	EIA NO.

SEMICONDUCTOR CONVERSION CHART

DPN. DATE 5/6/75
CHK. DATE
ENG. DATE
PROJ. ENG. DATE
PROD. DATE

NEXT HIGHER ASSY: Ø-UA-VT50-Ø-Ø

SCALE

SHEET 1 OF 4

digital

TITLE: KEYBOARD VT51/VT50H

SIZE D | CODE CS | NUMBER 5411170-0-1 | REV. B

DIST.

"THIS DRAWING AND SPECIFICATIONS, HEREIN, ARE THE PROPERTY OF DIGITAL EQUIPMENT CORPORATION AND SHALL NOT BE REPRODUCED OR COPIED OR USED IN WHOLE OR IN PART AS THE BASIS FOR THE MANUFACTURE OR SALE OF ITEMS WITHOUT WRITTEN PERMISSION.
COPYRIGHT © 1975 DIGITAL EQUIPMENT CORPORATION"

* JUMPER

JUMPER	VT50H,J 54111170-2	VT52 54111170-2	VT61 54111170-0
W160	IN	IN	OUT
W210	IN	IN	OUT
W211	IN	IN	OUT
W212	OUT	OUT	IN
W213	IN	IN	OUT
W214	OUT	IN	IN
W216	OUT	IN	OUT
W217	OUT	OUT	IN
W219	IN	OUT	IN
W220	OUT	IN	OUT

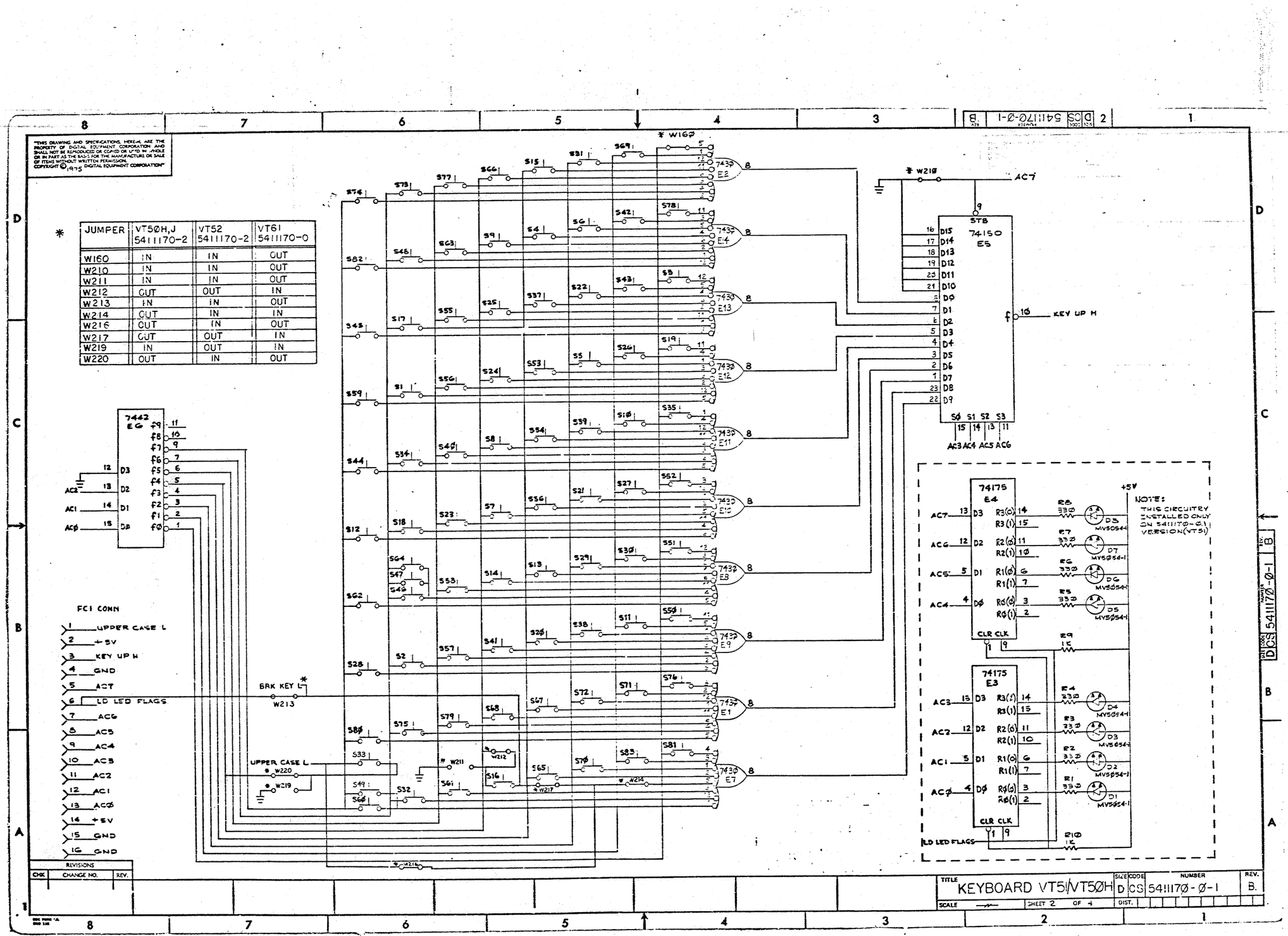

REVISIONS		
CHK	CHANGE NO.	REV.

TITLE	SIZE	CODE	NUMBER	REV.
KEYBOARD VT51/VT50H	D	CS	54111170-0-1	B.
SCALE	SHEET 2 OF 4	DIST.		

"THIS DRAWING AND SPECIFICATIONS, HEREIN, ARE THE PROPERTY OF DIGITAL EQUIPMENT CORPORATION AND SHALL NOT BE REPRODUCED OR COPIED OR USED IN WHOLE OR IN PART AS THE BASIS FOR THE MANUFACTURE OR SALE OF ITEMS WITHOUT WRITTEN PERMISSION.
COPYRIGHT © 19XX DIGITAL EQUIPMENT CORPORATION"

WIRE TABLE

ITEM NO	DESCRIPTION AWG	COLOR	FROM CONNECTION	TO CONNECTION	REMARKS
21	#22	BLK	P1-1	FC1-2	+5V
		BRN	P1-2	FC1-3	KEY UP H
		RED	P1-3	FC1-4	GND
		ORN	P1-4	FC1-5	AC5
		YEL	P1-5	FC1-9	AC4
		GRN	P1-6	FC1-10	AC3
		BLU	P1-7	FC1-11	AC2
		VIO	P1-8	FC1-12	AC1
		GRY	P1-9	FC1-13	AC0
		WHT	P1-10	FC1-6	BRK KEY
21	#22	BLK	P1-11	FC1-7	AC6

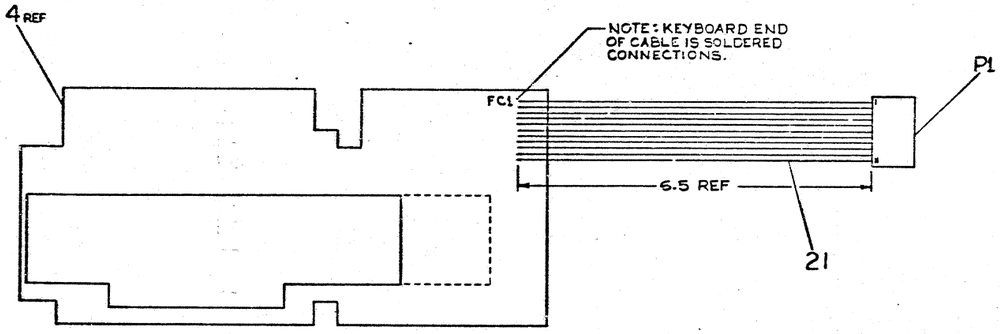

INCH

QUANTITY & VARIATION	DESCRIPTION	DWG. PART NO.	ITEM NO.
	UNLESS OTHERWISE SPECIFIED DIMENSIONS ARE IN INCHES		
ANGLES ±0° 30'	CLASS OF ACCURACY (CHECK ONE)	NOMINAL DIMENSION RANGE INCHES: OVER 0 TO .12; OVER .12 TO .75; OVER .75 TO 2.5; OVER 2.5 TO 12.0; OVER 12.0 TO 40.0; OVER 40.0 TO 80.0	
SURFACE QUALITY IN MICROINCHES	MEDIUM ☐	±.004	±.008 ±.012 ±.016 ±.024 ±.36
	PREFERRED ☐	±.012	±.016 ±.025 ±.04 ±.063 ±.09

THIRD ANGLE PROJECTION

REMOVE BURRS AND BREAK SHARP CORNERS

DO NOT SCALE DWG

MATERIAL —

FINISH —

DRN. ____ DATE ____
CHK'D ____ DATE ____
ENG. ____ DATE ____
PROJ. ENG. ____ DATE ____
PROD. ____ DATE ____
NEXT HIGHER ASSY.

FIRST USED ON: VT50H/VT51

digital

TITLE: KEYBOARD VT51/VT50H (CABLE CONN)

SIZE D | CODE | NUMBER: 54111?0-0-1 | REV. B

SCALE —

SHEET 3 OF 4

DIST:

REVISIONS			
SYM	CHANGE NO.	REV.	

SEE FORM NO. 888 38C-C

54111?0-0-1 REV B

DWG CODE D CS 54111?0-0-1 B

"THIS DRAWING AND SPECIFICATIONS, HEREIN, ARE THE PROPERTY OF DIGITAL EQUIPMENT CORPORATION AND SHALL NOT BE REPRODUCED OR COPIED OR USED IN WHOLE OR IN PART AS THE BASIS FOR THE MANUFACTURE OR SALE OF ITEMS WITHOUT WRITTEN PERMISSION. COPYRIGHT © 1975, DIGITAL EQUIPMENT CORPORATION"

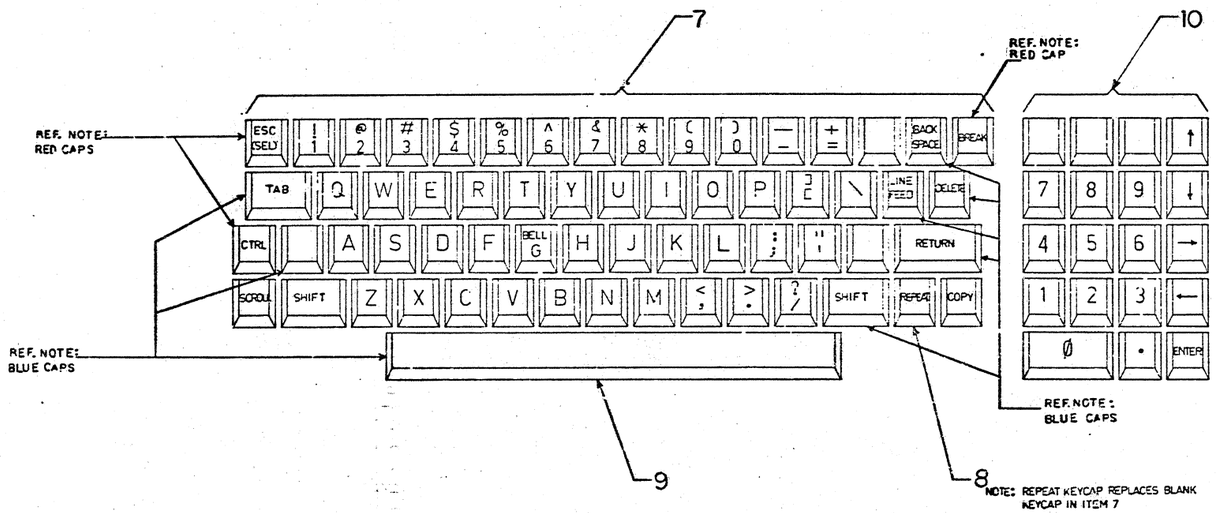

DRN.		FIRST USED ON	VT50 H/ VT51
CHK'D		TITLE	KEYBOARD VT50H/VT51 (VT50H KEYCAPS)
ENG.			
PROJ. ENG.			
PROD.			
NEXT HIGHER ASSY.			
SCALE NONE		SIZE D	CODE CS NUMBER 54 11170-0-0 REV. B
SHEET 4 OF 4		DIST.	

digital

REVISIONS: REV. / CHANGE NO. / CHK

BEC FORM NO. BRD 102-0

JUMPER TABLE

REFERENCE NO.	LENGTH (INCHES)
	ON 300 CENTERS
	ON 325 CENTERS
W1-3, W211, W210, W214	ON 350 CENTERS
	ON 375 CENTERS
W4, W5, W210, W213, W219, W22	ON 400 CENTERS
	ON 425 CENTERS
W6—W13, W217	ON 450 CENTERS
	ON 475 CENTERS
W14—W24, W216	ON 500 CENTERS
	ON 525 CENTERS
W25—W37	ON 550 CENTERS
	ON 575 CENTERS
W38—W50	ON 600 CENTERS
	ON 625 CENTERS
W51—W62	ON 650 CENTERS
	ON 675 CENTERS
W63—W91	ON 700 CENTERS
	ON 725 CENTERS
W92—W120, W209	ON 750 CENTERS
	ON 775 CENTERS
W142—W160	ON 800 CENTERS
	ON 825 CENTERS
W151—W168	ON 850 CENTERS
	ON 875 CENTERS
W169—W181	ON 900 CENTERS
	ON 925 CENTERS
W182—W184	ON 950 CENTERS
	ON 975 CENTERS
W185—W191	ON 1000 CENTERS
	ON 1025 CENTERS
W192—W195	ON 1050 CENTERS
	ON 1075 CENTERS
W196—W202	ON 1100 CENTERS
	ON 1175 CENTERS
W201—W203	ON 1200 CENTERS
W204	ON 1225 CENTERS
W205—W208	ON 1250 CENTERS

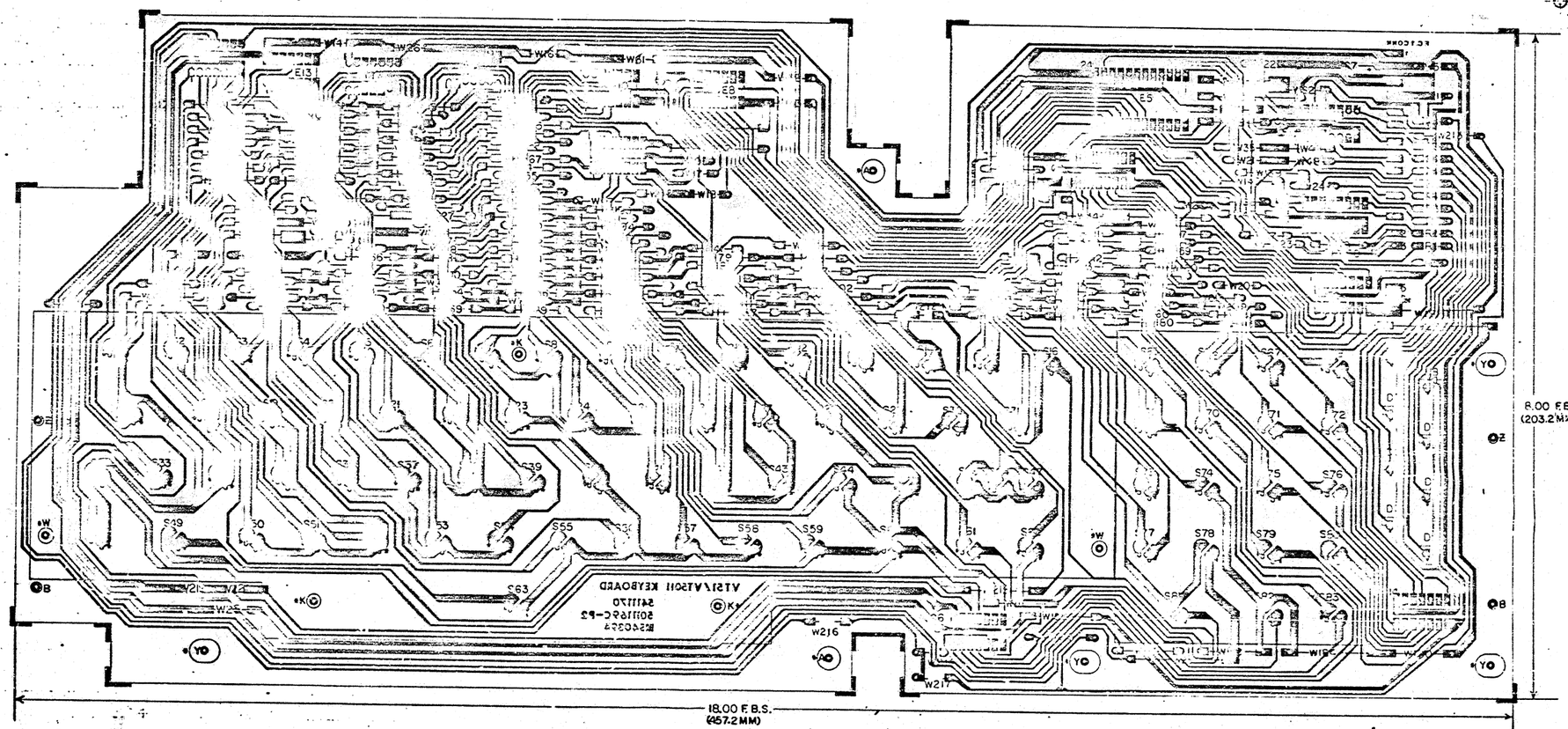

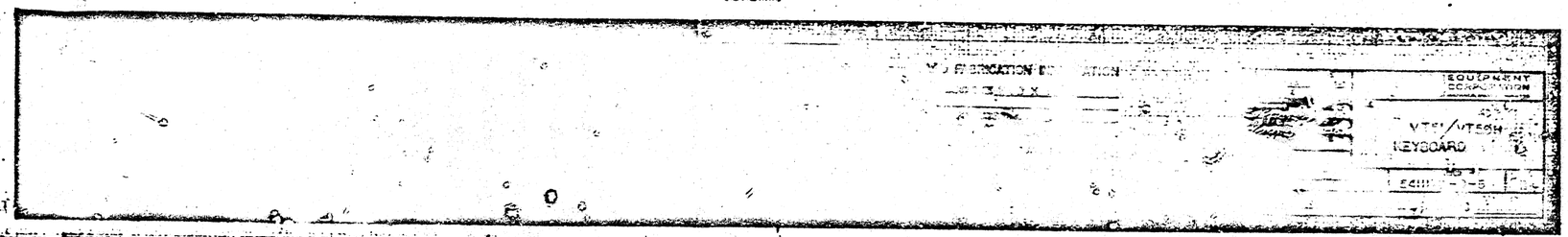

SIZE	CODE	NUMBER	REV.
B	MH	541117Ø-Ø-6	C

MODULE ECO HISTORY

PRODUCT LINE 98
DATE RELEASED 3/21/75
RELEASED BY BUZYNSKI

PAGE 1 OF 1

RELEASED CS REV. A
RELEASED ETCH BD REV. B

ECO. NO.	ORIGINATOR	DATE WRITTEN	NEW CS REV.	NEW ETCH BOARD REV.	IS IT MANDATORY TO REWORK ALL EARLIER VERSIONS (NOW AVAILABLE OR RETURNED FOR REPAIR) TO THIS REVISION LEVEL?			ARE ALL REVISIONS OF THIS MODULE COMPLETELY COMPATIBLE NOW (CAN BE MIXED INDISCRIMINATELY)?			SIMPLIFIED CHANGE DESCRIPTION	NO. PARTS ADDED	NO. PARTS DELETED
					YES	NO	CONDITIONAL (EXPLAIN)	YES	NO	CONDITIONAL (EXPLAIN)			
00001	BUZYNSKI		B	C		✓		✓			RELAYOUT TO REMOVE ECO WIRES	—	—
0001A	BUZYNSKI	5-1-75				✓		✓			DOC. CHG.	—	—
00002	NEUMANN	29-OCT-75	C	C		X		X			DOC CHG	0	0

REVISIONS		
CHK	CHG NO.	REV.
	00001	A
	00001A	B
	00002	C

DRN.	J BUZYNSKI	DATE 3-1-75
CHK'D	J BUZYNSKI	DATE [illegible]
ENG.	[illegible]	DATE 3-12-75
PROD.	[illegible]	DATE [illegible]

EQUIPMENT CORPORATION
MAYNARD, MASSACHUSETTS

MODULE ECO HISTORY

SIZE	CODE	NUMBER	REV.
B	MH	541117Ø-Ø-6	C

DEC 16-(326)-1026-N971
DRB 104

DIGITAL EQUIPMENT CORPORATION
MAYNARD, MASSACHUSETTS

PARTS LIST

MADE BY J. CAHILL	CHECKED J. CAHILL	SECTION 1
DATE 3/6/75	DATE 3/6/75	
ENG DATE	PROD DATE	ISSUED SECT. 1

ITEM NO.	DWG NO./PART NO.	DESCRIPTION	QUANTITY/VARIATION 7010933-0-0
1	D-CS-5410886-1	MONITOR POWER SUPPLY	1
2	D-CS-5410906-1	DATA PATHS MEMORY AND DECODER	1
3	D-CS-5410902-1	ROM UART AND TIMING	1
4	A-SP-3700179-0-0	PACKAGING INSTRUCTION: (DATA PATH BOARD,	1
		ROM/UART BOARD, POWER SUPPLY BOARD)	
5	A-SP-3700180-0-0	PACKAGING INSTRUCTION: (DATA PATH AND	1
		ROM/UART)	
6	A-SP-3700181-0-0	PACKAGING INSTRUCTION: (POWER SUPPLY	1
		BOARD)	
7	A-SP-3700182-0-0	PACKAGING INSTRUCTION: (KEYBOARD-	1
		CUSTOMER SHIPPING PACKAGE)	

TITLE	NEXT HIGH ASSY	SIZE	CODE	NUMBER	REV.	ECO NO.
MODULE PACKAGE (VT5Ø)	B-DD-VT5Ø-Ø	A	PL	7010933-0-0		
	SHEET 1 OF 1	DIST.				

DEC FORM DEC 16 (325)-1031 NS70
DRA 110

This drawing and specifications, herein, are the property of Digital Equipment Corporation and shall not be reproduced or copied or used in whole or in part as the basis for the manufacture or sale of items without written permission.

DIGITAL EQUIPMENT CORPORATION
MAYNARD MASSACHUSETTS

PACKAGING INSTRUCTION

REV: _____ DATE: _____

TITLE DATA PATH BOARD, ROM/UART BOARD, POWER SUPPLY BOARD

MATERIAL REQUIREMENTS

Quantity	Purchase Specification No.	Description
1	9905683	Regular Slotted Carton
1	9905677	Laminated Buildup
1	9905678	Scored Sheet with Foam
1	9905680	Die-Cut Carton with Foam
1	9905682	Scored Sheet
A/R	9905729	3-in. wide Glasflex Tape

NOTE

For individual shipment of each of the above packaged components, see the following Packaging Instructions:

Component	PI No.
ROM/UART (5410902) and Data Path (5410906)	A-SP-3700180-0-0
Power Supply Board (5410886)	A-SP-3700181-0-0

PACKAGING INSTRUCTIONS

Step	Procedure
1	Set up Regular Slotted Carton (9905683) using one strip of Glasflex tape across the bottom and one strip across each end.
2	Fold up edges of Scored Sheet with Foam (9905678) *with foam facing up* and place it into the cavity of the Laminated Buildup (9905677). Make sure that the cutouts in the foam match the cutouts in the bottom of the Laminated Buildup.
3	Place Power Supply Board (5410886) in the Scored Sheet and Laminated Buildup assembly by feeding the high voltage lead through the round hole in the foam pad and by feeding the black and red wires through the rectangular hole in the foam pad. Push the power supply down into the cavity in the Laminated Buildup. *Do not bend the pins.*
4	Fold the top flap of the Laminated Buildup down over the Power Supply and feed the tube socket harness through the round hole in the top flap.
5	Fold the bottom flap of the Laminated Buildup down and place the whole assembly into the Regular Slotted Carton. Position the assembly so that the bottom flaps are down and the sloping face is toward the outside end of the Regular Slotted Carton.

ENG	APPD	SIZE	CODE	NUMBER	REV
K. Patton 3/21/75	J. W. Lawrence 3/21/75	A	SP	3700179-0-0	

DEC 8-(551)-1031-1-R671
DRA - 130

SHEET 1 OF 3

PACKAGING INSTRUCTION — CONTINUATION SHEET

TITLE DATA PATH BOARD, ROM/UART BOARD, POWER SUPPLY BOARD

Step	Procedure
6	Fold the Scored Sheet (9905682) into a "W" form and place it between the power supply assembly and the end of the Regular Slotted Carton.
7	Open the two top flaps of the Die-Cut Carton with Foam assembly (9905680) which has been supplied set-up.
8	Place one ROM/UART Board (5410902) in the side of the Die-Cut Carton with the three pieces of foam on the top flap. Place the board into the cavity with the pins facing toward the middle divider. The pins fit into the slots provided in the middle divider.
9	Place one Data Path Board (5410902) into the second cavity with the pin connector toward the middle divider.
10	Close the Die Cut Carton across the top with one strip of Glasflex tape.
11	Place the Die-Cut Carton assembly (tape facing down) into the Regular Slotted Carton.
12	Close and seal the Regular Slotted Carton using one strip of Glasflex tape across the middle and one strip across each end.

		SIZE	CODE	NUMBER	REV
K. Patton 3/21/75	J. W. Lawrence 3/21/75	A	SP	3700179-0-0	

DEC 8-(551)-1031-2-R671
DRA - 130

SHEET 2 OF 3

This drawing and specifications, herein, are the property of Digital Equipment Corporation and shall not be reproduced or copied or used in whole or in part as the basis for the manufacture or sale of items without written permission.

PACKAGING INSTRUCTION

REV: _____ DATE: _____

TITLE DATA PATH BOARD, ROM/UART BOARD, POWER SUPPLY BOARD

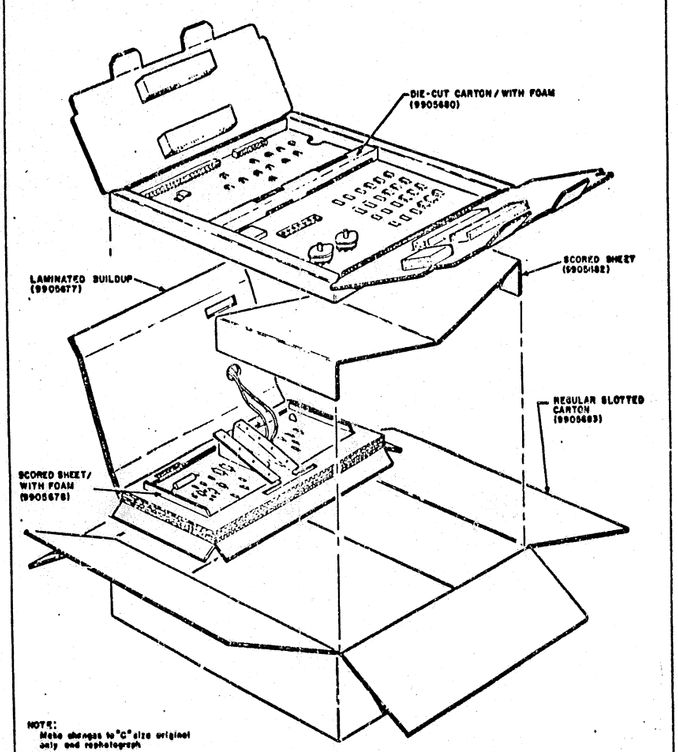

NOTE:
Make changes to "C" size original only and rephotograph

ENG.	APPD.	SIZE	CODE	NUMBER
Bill Patton 3/21/75	J. W. Lawrence 3/21/75	A	SP	3700179-0-0

SHEET 3 OF 3

CONTINUATION SHEET

12 Close and seal the [illegible] across each end

This drawing and specifications, herein, are the property of Digital Equipment Corporation and shall not be reproduced or copied or used in whole or in part as the basis for the manufacture or sale of items without written permission.

DIGITAL EQUIPMENT CORPORATION
MAYNARD MASSACHUSETTS

PACKAGING INSTRUCTION | REV: ____ DATE: ____

TITLE DATA PATH (5410906) and ROM/UART (5410902) SHIPPING PACKAGE

MATERIAL REQUIREMENTS

Quantity	Purchase Specification No.	Description
1	9905680	Die-Cut Carton with Foam
1	9905681	Scored Sheet
A/R	9905729	Glasflex Tape

PACKAGING INSTRUCTIONS

Step	Procedure
1	Open the two top flaps on the Die-Cut with Foam (9905680) which has been supplied set-up.
2	Place one ROM/UART Board (5410902) *components facing up* into the section of the Die-Cut Carton with the three pieces of foam on the top flap. Place the board into the cavity with the pins facing toward the middle divider. The pins fit into the slots provided in the middle divider.
3	Place one Data Path Board (5410902) *components facing up* into the second cavity.
4	Close Die-Cut Carton and seal across the top with one strip of Glasflex tape.
5	Place the Die-Cut Carton assembly (tape face down) into the Scored Sheet (9905681). Fold up each end of the Die-Cut Carton and seal with one strip of tape across the middle and one strip across each end.

ENG	APPD	SIZE	CODE	NUMBER	REV
C. Patton 3/21/75	W. Lawrence 3/21/75	A	SP	3700180-0-0	

DEC 8-(551)-1031-1-R671
DRA - 129

This drawing and specifications, herein, are the property of Digital Equipment Corporation and shall not be reproduced or copied or used in whole or in part as the basis for the manufacture or sale of items without written permission.

PACKAGING INSTRUCTION | REV: ____ DATE: ____

TITLE DATA PATH (5410906) AND ROM/UART (5410902) SHIPPING PACKAGE

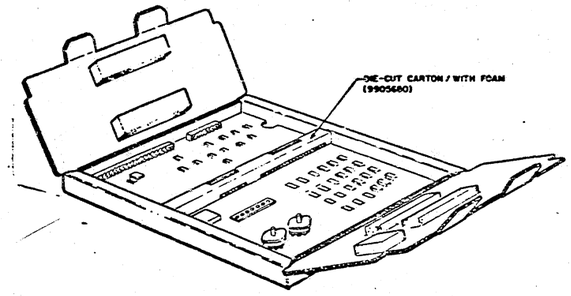

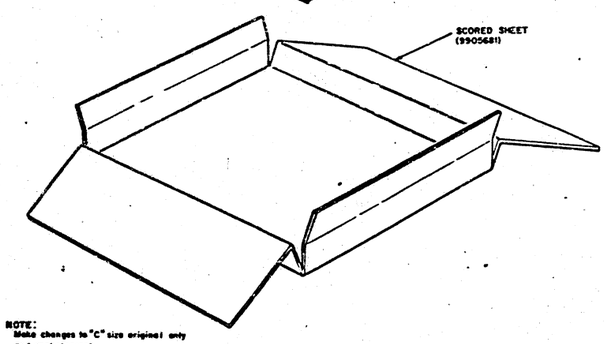

NOTE:
Make changes to "C" size original only and rephotograph.

ENG.	APPD.	SIZE	CODE	NUMBER
Bill Patton 3/21/75	W. Lawrence 3/21/75	A	SP	3700180-0-0

BMC-588

This drawing and specifications, herein, are the property of Digital Equipment Corporation and shall not be reproduced or copied or used in whole or in part as the basis for the manufacture or sale of items without written permission.

DIGITAL EQUIPMENT CORPORATION
MAYNARD MASSACHUSETTS

PACKAGING INSTRUCTION	REV:	DATE:
TITLE POWER SUPPLY BOARD (5410886)		

MATERIAL REQUIREMENTS

Quantity	Purchase Specification No.	Description
1	9905679	Regular Slotted Carton
1	9905678	Scored Sheet/with Foam
1	9905677	Laminated Buildup
A/R	--	Glasflex Tape

PACKAGING INSTRUCTIONS

Step	Procedure
1	Set up Regular Slotted Carton (9905679) using one strip of Glasflex tape across the bottom and one strip across each end.
2	Fold up edges of the Scored Sheet with Foam (9905678) *with foam facing up* and place it into the cavity of the Laminated Buildup (9905677). Make sure that the cutouts in the foam match the cutout in the bottom of the Laminated Buildup.
3	Place the Power Supply Board (5410886) in the Scored Sheet and Laminated Buildup assembly by feeding the high voltage lead through the round hole in the foam pad, and by feeding the black and red wires through the rectangular hole in the foam pad. Push the power supply down into the cavity. *Do not bend the pins.*
4	Fold the top flap of the Laminated Buildup down over the Power Supply Board and feed the tube socket harness through the round hole in the top flap.
5	Fold the three bottom flaps of the Laminated Buildup down and place the whole assembly into the set up Regular Slotted Carton.
6	Close and seal the Regular Slotted Carton using one strip of Glasflex tape across the middle and one strip across each end.

ENG	APPD	SIZE	CODE	NUMBER	REV
E. Patton 3/21/75	J. W. Lawrence 3/21/75	A	SP	3700181-0-0	

DEC 8-(551)-1031-1-R671
DRA - 129

SHEET 1 OF 2

This drawing and specifications, herein, are the property of Digital Equipment Corporation and shall not be reproduced or copied or used in whole or in part as the basis for the manufacture or sale of items without written permission.

PACKAGING INSTRUCTION	REV:	DATE:
TITLE POWER SUPPLY BOARD (5410886) SHIPPING PACKAGE		

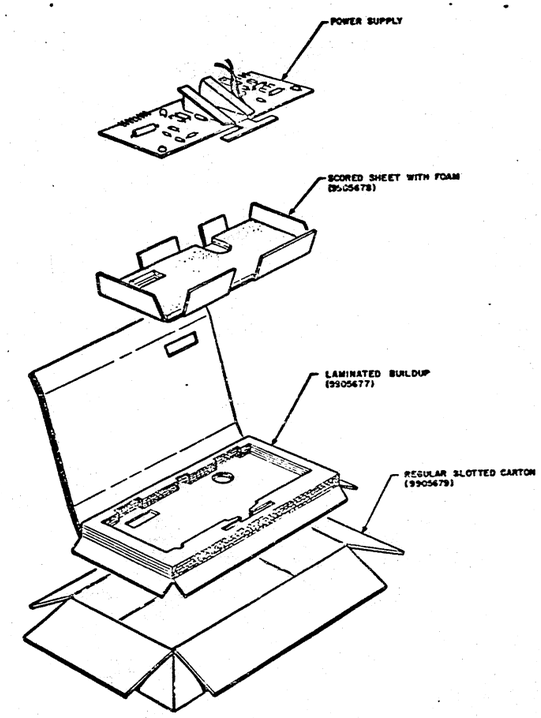

NOTE:
Make changes to "C" size original only and rephotograph.

ENG.	APPD.	SIZE	CODE	NUMBER
E. Patton 3/21/75	J. W. Lawrence 3/21/75	A	SP	3700181-0-0

DRC-109

SHEET 2 OF 2

This drawing and specifications, herein, are the property of Digital Equipment Corporation and shall not be reproduced or copied or used in whole or in part as the basis for the manufacture or sale of items without written permission.

DIGITAL EQUIPMENT CORPORATION
MAYNARD MASSACHUSETTS

PACKAGING INSTRUCTION	REV:	DATE:
TITLE KEYBOARD (5410893) CUSTOMER SHIPPING PACKAGE		

MATERIAL REQUIREMENTS

Quantity	Purchase Specification No.	Description
1	9905676	Die-Cut Sheet with Foam
1	9905679	Regular Slotted Carton
A/R	9905729	3-in. wide Glasflex Tape

PACKAGING INSTRUCTIONS

Step	Procedure
1	Place keyboard on Die-Cut Sheet with Foam (9905676) with spacer bar toward the *"Spacer Bar Here"* printing on the Die-Cut Sheet.
2	Fold the rear sheet down and over the keyboard so that the keys and colored wires fit up through the cutouts in the sheet.
3	Fold up and down over the keyboard so that the foam is held down on top of the keys.
4	Fold the two side pieces up so that the tabs (6) on the part holding the keyboard down fit into the slots in the side pieces.
5	Set up Regular Slotted Carton and tape with one strip of Glasflex tape across the middle and one strip across each end.
6	Place Die-Cut Sheet with Foam and keyboard assembly into the Regular Slotted Carton *with the keys facing up*.
7	Close and seal carton with one strip of Glasflex tape across the middle and one strip across each end.

ENG	APPD	SIZE	CODE	NUMBER	REV
E. Patton 3/21/75	W. Laurence 3/21/75	A	SP	3700182-0-0	

DEC 8-(5551)-1021-1-R671
DRA - 129

SHEET 1 OF 2

This drawing and specifications, herein, are the property of Digital Equipment Corporation and shall not be reproduced or copied or used in whole or in part as the basis for the manufacture or sale of items without written permission.

PACKAGING INSTRUCTION	REV:	DATE:
TITLE KEYBOARD(5410893) CUSTOMER SHIPPING PACKAGE		

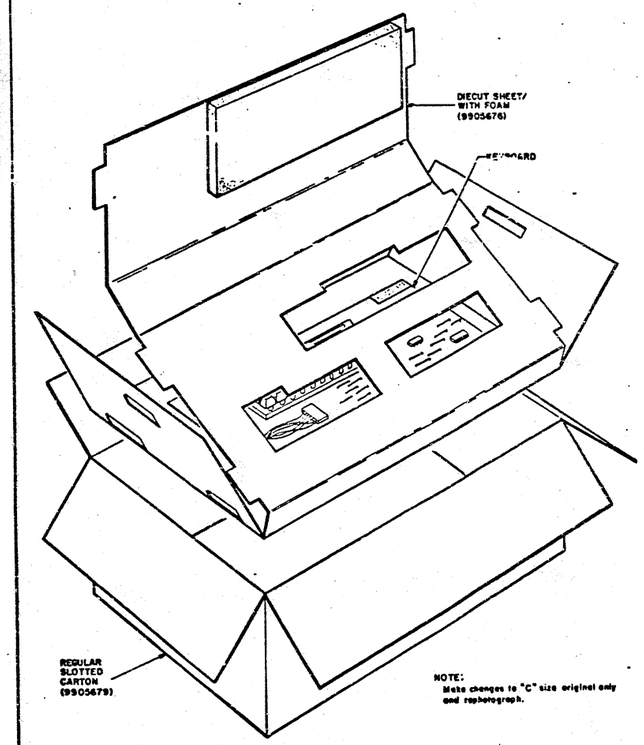

NOTE:
Make changes to "C" size original only and rephotograph.

ENG.	APPD.	SIZE	CODE	NUMBER
E. Patton 3/21/75	W. Laurence 3/21/75	A	SP	3700182-0-0

SHEET 2 OF 2

DIGITAL EQUIPMENT CORPORATION
MAYNARD, MASSACHUSETTS

PARTS LIST

MADE BY S. R. HOLMES	CHECKED S. R. HOLMES	SECTION
DATE 7 April 1975	DATE 7 April 1975	
ENG S. R. HOLMES	PROD S. R. HOLMES	ISSUED SECT.
DATE 4-11-75	DATE 4-11-75	

ITEM NO.	DWG NO./PART NO.	DESCRIPTION	QUANTITY/VARIATION VT5Ø-CA	VT5Ø-CB	VT5Ø-CC	VT5Ø-DA	VT5Ø-DB	VT5Ø-DC
1	MD-1Ø-DCVTA	VTØ5, VTØ6, VT5Ø Diagnostic; with Listing	1	1	1	1	1	1
2	7011089	DECsystem-1Ø "283B Conn to VT50 Term" Cable NOTE: Insure that this cable is shipped with terminal, usually installed by Manufacturer. If cable is not installed from the Manufacturer insure parts required to create cable in field are shipped i.e., -add: 1-1205857-0-2, and 1-1205857-0-1, 1-7011089-0-0 cable print to contents of the shipping container.	1	1	1	1	1	1
3	DEC-ØØ-HVT5A-A-D	VT5Ø Video Terminal Programmer's Manual NOTE: Insure 1 manual per VT5Ø shipped. Terminal usually contains a manual when shipped from Manufacturer.	1	1	1	1	1	1
4	VT5Ø-TT #1	VT5Ø Tech Tip =1, VT5Ø Installation and Maintenance Guide. NOTE: 1 per site.	A/R					A/R

TITLE	ASSY NO.	SIZE	CODE	NUMBER	REV.	ECO NO.
VT5Ø SHIPPING LIST DECsystem-1Ø	SHEET 1 OF 1	A	PL	PDP1Ø-Ø-SHIP	-	VT50-30010
		DIST.				

DEC FORM DEC 16-(325)-1031-X870
DRA 110

"THIS DRAWING AND SPECIFICATIONS, HEREIN, ARE THE PROPERTY OF DIGITAL EQUIPMENT CORPORATION AND SHALL NOT BE REPRODUCED OR COPIED OR USED IN WHOLE OR IN PART AS THE BASIS FOR THE MANUFACTURE OR SALE OF ITEMS WITHOUT WRITTEN PERMISSION. COPYRIGHT © 1974, DIGITAL EQUIPMENT CORPORATION"

WIRE TABLE

DESCRIPTION			FROM			TO			SIGNAL
		COLOR	POINT	CONNECTOR	WITH	POINT	CONNECTOR	WITH	
7	22	RED	—	P1 - R	—	2	—	ITEM #8	KEYBOARD-(OUTPUT)
↓	↓	BLK	—	P1 - BK	—	3	—	↓	PRINTER-(INPUT)
↓	↓	GRN	—	P1 - GN	—	1	—	↓	KEYBOARD-(OUTPUT)
7	22	WHT	—	P1 - Y	—	4	—	ITEM #8	PRINTER-(INPUT)

NOTES:
1. DISCARD SMALL SCREW SUPPLIED WITH PLUG (ITEM #6).
2. ATTACH CONN (ITEM #2) TO CABLE WITH ONE (1) CABLE TIE (ITEM #9) DO NOT REMOVE CONN FROM BAG.

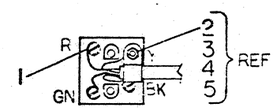

VIEW A-A

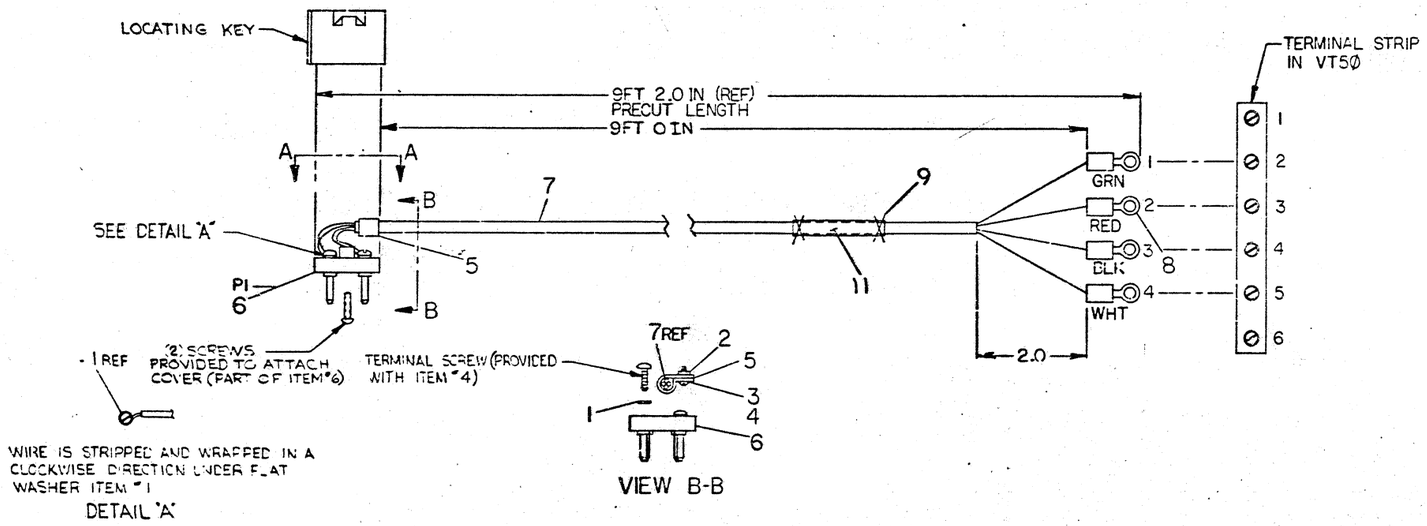

WIRE IS STRIPPED AND WRAPPED IN A CLOCKWISE DIRECTION UNDER FLAT WASHER ITEM #1

DETAIL "A"

VIEW B-B

QTY.	DESCRIPTION	PART NO.	ITEM NO.
1	LABEL, CABLE ID	9009532	11
1	CONN, TELEPHONE (JACK)	1205357-02	10
3	CABLE, TIE	9007880	9
4	TERMINAL, RING TONGUE	9001930-00	8
A/R	CABLE, 4 CONDUCTOR	9007706	7
1	CONN, TELEPHONE (PLUG)	1205357-01	6
1	CABLE CLAMP, 2	9007079	5
1	WASHER, FLAT NYLON #4	9006706	4
1	SCR, NYLON BIND, HD 4-40X.38	9006401-4	3
1	NUT NYLON 4-40	9007992	2
4	WASHER FLAT #4	9003172	1

PARTS LIST

FIRST USED ON OPTION/MODEL: VT50/DEC SYSTEM 10

DIMENSIONAL TOLERANCE: DIMENSIONS ARE MILLIMETERS / INCHES UNLESS OTHERWISE SPECIFIED

MILLIMETERS	INCHES	ANGLES
.XXX = ±0.10	.XXX = ±.005	±0° 30'
.XX = ±0.5	.XX = ±.02	
.X = ±2.	.X = ±.1	

THIRD ANGLE PROJECTION

REMOVE BURRS AND BREAK SHARP CORNERS SURFACE QUALITY ✓

MATERIAL: SEE PARTS LIST

FINISH: —

DRN. DATE
CHK'D. DATE 2-24-75
ENG. DATE
PROJ. ENG. DATE
PROD. DATE
NEXT HIGHER ASSY.
SCALE
SHEET OF

digital

TITLE: 253B CONN TO VT50 TERM

SIZE D | CODE IA | NUMBER 7011089-0-0 | REV.

DIST.

REVISIONS: CHK | CHANGE NO. | REV.

"THIS DRAWING AND SPECIFICATIONS, HEREIN, ARE THE PROPERTY OF DIGITAL EQUIPMENT CORPORATION AND SHALL NOT BE REPRODUCED OR COPIED OR USED IN WHOLE OR IN PART AS THE BASIS FOR THE MANUFACTURE OR SALE OF ITEMS WITHOUT WRITTEN PERMISSION.
COPYRIGHT © 1974, DIGITAL EQUIPMENT CORPORATION"

PART NO	DIM. 'A'	MAT'L	FINISH	USED ON
-1	96.0	1.02(.040") THK. LEXAN WITH 3M #468 STICK BACK TAPE	92-00001-47	EXP. ABS.
-2	101.0	1.59(1/16") THK. LEXAN WITH 3M #4032 STICK BACK TAPE	92-00151-47	INJ. MLD.

NOTES:
1. SILK SCREEN "DIGITAL DECSCOPE" LOGO #68 GREY.
2. HARDCOAT AFTER SCREENING. -1 ONLY.
3. APPLY S&W POLANE PAINT ON -2.
4. APPLY 3M TAPE #4032 ON ENTIRE SURFACE FAR SIDE.

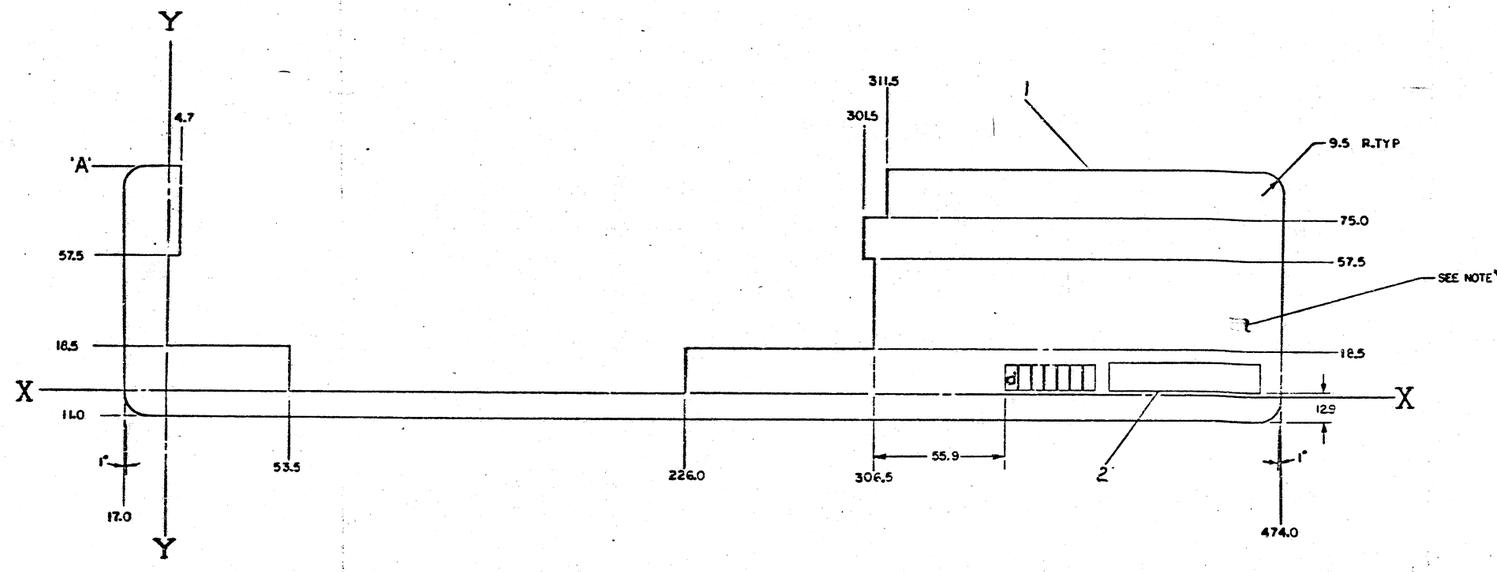

QTY.	DESCRIPTION	PART NO.	ITEM NO.
A/R	TAPE 3M 4032	3612357	3
1	SILK SCREEN	B-GG-7413093-0-1	2
1	BEZEL, KEYBOARD (VT50, VT51)		1

PARTS LIST

FIRST USED ON OPTION/MODEL

DIMENSIONAL TOLERANCE
DIMENSIONS ARE MILLIMETERS
UNLESS OTHERWISE SPECIFIED

MILLIMETERS	INCHES	ANGLES
XXX = ±0.10	XXX = ±.005	±0° 30'
XX = ±0.5	XX = ±.02	
X = ±2.	X = ±1.	

THIRD ANGLE PROJECTION

REMOVE BURRS AND BREAK SHARP CORNERS SURFACE QUALITY ✓

MATERIAL SEE TABLE

FINISH SEE NOTES

DRN. DATE 1-1-74
CHK'D DATE 12/1/74
ENG. DATE 3/1/74
PROJ. ENG. DATE 1/1/74
PROD. DATE 1/1/74

NEXT HIGHER ASSY.
D-UA-VT52-0-0
SCALE 1/1
SHEET 1 OF 1

digital

TITLE
BEZEL, KEYBOARD
(VT50, VT51)

SIZE D | CODE | NUMBER 7413093-0-0 | REV. B
DIST.

REVISIONS

CHK	CHANGE NO.	REV.
	7413093-0XXX01	A
	L. BALOGH 1-23-75	
	7413093-0XXX02	B
	L. BALOGH 1-23-75	

D 7413093-0-0 B

"THIS DRAWING AND SPECIFICATIONS, HEREIN, ARE THE PROPERTY OF DIGITAL EQUIPMENT CORPORATION AND SHALL NOT BE REPRODUCED OR COPIED OR USED IN WHOLE OR IN PART AS THE BASIS FOR THE MANUFACTURE OR SALE OF ITEMS WITHOUT WRITTEN PERMISSION.
COPYRIGHT © 1975, DIGITAL EQUIPMENT CORPORATION"

12,954

digital decscope

35,880
SPEC# 9200101-68 GRAY

DRN. J. Demers	2-20-75	FIRST USED ON UT50	digital
CHK'D.	2-20-75		
ENG.	2-20-75	TITLE BEZEL KEYBOARD UT50	
PROJ. ENG.	2-1-75		
PROD.	2-1-75		
NEXT HIGHER ASSY.			
D-IA-7413093-0-0		SIZE A / CODE 55 / NUMBER 7413093-0-1	REV.
SCALE 1/1			
SHEET 1 OF 1		DIST.	

REVISIONS		
CHK	CHANGE NO.	REV.

"THIS DRAWING AND SPECIFICATIONS, HEREIN, ARE THE PROPERTY OF DIGITAL EQUIPMENT CORPORATION AND SHALL NOT BE REPRODUCED OR COPIED OR USED IN WHOLE OR IN PART AS THE BASIS FOR THE MANUFACTURE OR SALE OF ITEMS WITHOUT WRITTEN PERMISSION. COPYRIGHT © 1976, DIGITAL EQUIPMENT CORPORATION"

NOTES:

1. MATERIAL USE 1.02(.040) THK LEXAN WITH 3M # 4032 STICKBACK TAPE TO THE ENTIRE BACK SURFACE OF THE BEZEL
2. APPLY S & W POLANE PAINT 92-00151-47
3. SILK SCREEN DEMINSION ONLY

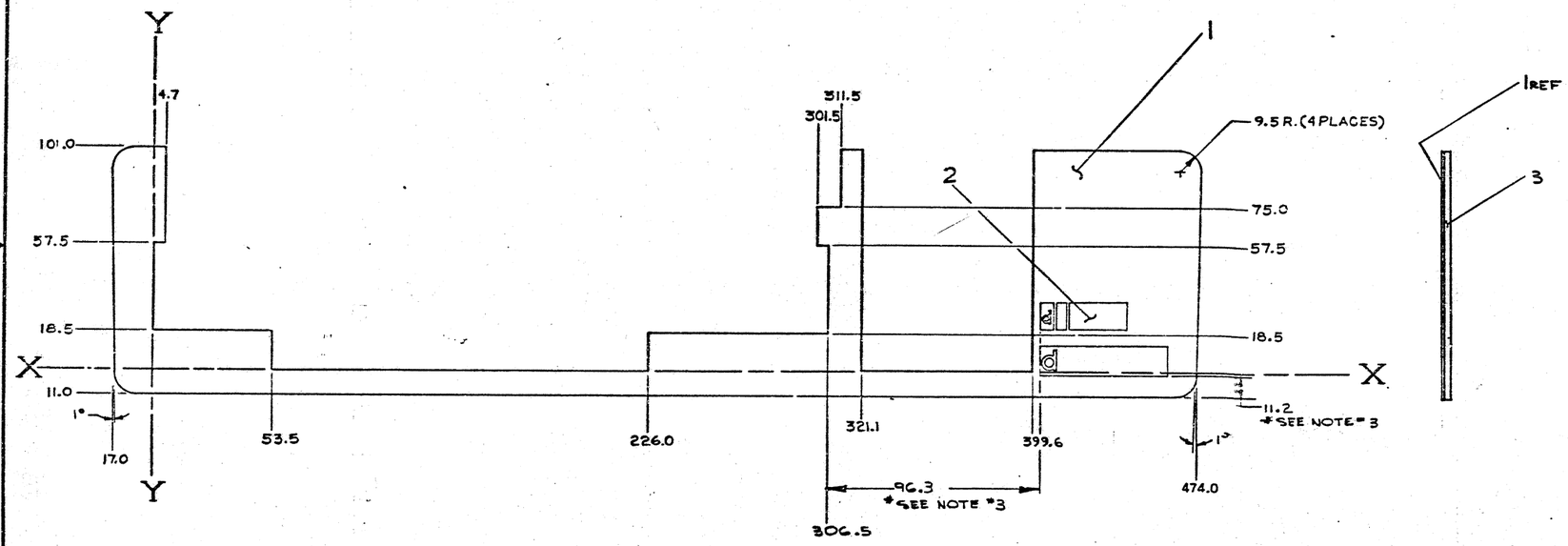

METRIC DIMENSIONS

A/R	TAPE 3M # 4032	3612357	3
1	SILK SCREEN	7413432-0-1	2
1	BEZEL, KEYBOARD		1
	DESCRIPTION	DWG. PART NO.	ITEM NO.

UNLESS OTHERWISE SPECIFIED DIMENSIONS ARE IN MILLIMETERS

ANGLES ±0° 30'

SURFACE QUALITY IN MICROINCHES

CLASS OF ACCURACY (CHECK ONE)

NOMINAL DIMENSION RANGE MILLIMETER

	OVER 1 TO 5	OVER 5 TO 30	OVER 30 TO 100	OVER 100 TO 300	OVER 300 TO 1000	OVER 1000 TO 2000
MEDIUM	±0.1	±0.2	±0.3	±0.4	±0.6	±1.0
PREFERRED	±0.3	±0.4	±0.6	±1.0	±1.6	±2.5

QUANTITY & VARIATION

THIRD ANGLE PROJECTION

REMOVE BURRS AND BREAK SHARP CORNERS

DO NOT SCALE DWG

MATERIAL SEE NOTE #1

FINISH SEE NOTE #2

DRN. 2/20/75

CHK. 3/21/75

ENG.

PROJ. ENG.

PROD. 3-6-75

NEXT HIGHER ASSY.

SCALE 1/1

SHEET 1 OF 1

FIRST USED ON VT50H/VT51

digital

TITLE BEZEL KEYBOARD (VT50H)

SIZE 1 | CODE IA | NUMBER 7413432-0-0 | REV. A

DIST.

REVISIONS

CHK	CHANGE NO.	REV.
	7413432-00001	A

J. DUZYNSKI

DEC FORM NO. BN1-150

1 IA 7413432-0-0 A

"THIS DRAWING AND SPECIFICATIONS, HEREIN, ARE THE PROPERTY OF DIGITAL EQUIPMENT CORPORATION AND SHALL NOT BE REPRODUCED OR COPIED OR USED IN WHOLE OR IN PART AS THE BASIS FOR THE MANUFACTURE OR SALE OF ITEMS WITHOUT WRITTEN PERMISSION.
COPYRIGHT © 1975 DIGITAL EQUIPMENT CORPORATION"

digital

decscope

11.2

96.3

REVISIONS	
CHK	CHANGE NO.
	REV.

SPEC # 9200100-68 GRAY

DRN. J. Demeed	2-20-75	FIRST USED ON: VT51 & VT50H	digital
CHK'D		TITLE: KEYBOARD (VT51 + VT50+)	
ENG. [signature]	3-4-75		
PROJ. ENG.			
PROD.			
NEXT HIGHER ASSY.			
SCALE		SIZE: A	CODE: 55
SHEET OF		NUMBER: 7413432-0-1	REV.
		DIST.	

"THIS DRAWING AND SPECIFICATIONS, HEREIN, ARE THE PROPERTY OF DIGITAL EQUIPMENT CORPORATION AND SHALL NOT BE REPRODUCED OR COPIED OR USED IN WHOLE OR IN PART AS THE BASIS FOR THE MANUFACTURE OR SALE OF ITEMS WITHOUT WRITTEN PERMISSION. COPYRIGHT © 1975 DIGITAL EQUIPMENT CORPORATION"

NOTES:

1. INSTALL TUBING (ITEM #2) OVER STRAP (ITEM #3) BEFORE CEMENTING TO SUPPORT (ITEM #1)
2. CENTER STRAP ON SUPPORT, USING CEMENT (ITEM #4) ADHERE TOGETHER. DO NOT ALLOW CEMENT ON TOP OF STRAP

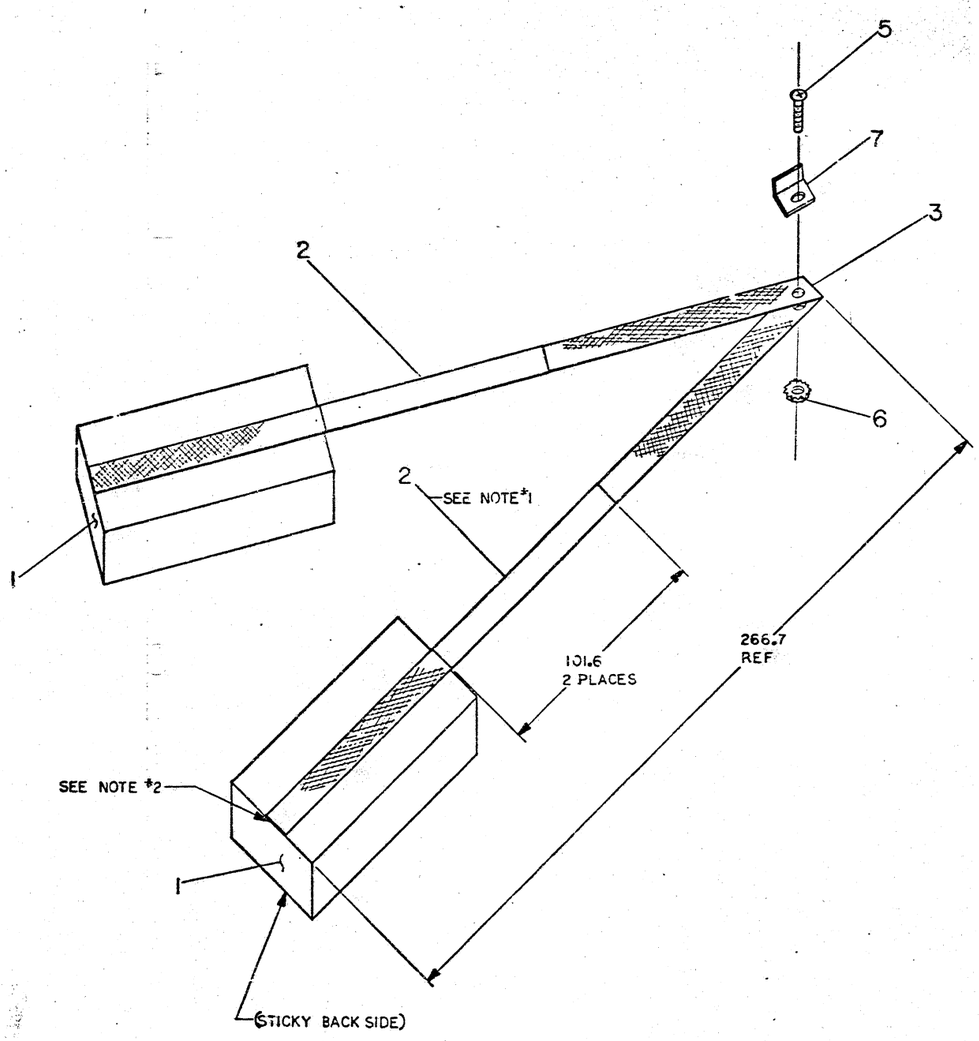

METRIC DIMENSIONS

QTY	DESCRIPTION	DWG PART NO.	ITEM NO.
1	MALE FAST ON	9007253	7
1	NUT KEPS #6-32	9008185	6
1	SCR PHL, PAN HD #6-32X.50LG	9006024-1	5
A/R	CEMENT HYBOND CONTACT	9007534	4
1	STRAP GND	2-MD-7413956-0-0	3
A/R	TUBING PVC (12.70 MM. BLK)	9107246	2
2	SUPPORT CRT GROUNDING	2-MD-7413757-0-0	1

UNLESS OTHERWISE SPECIFIED DIMENSIONS ARE IN MILLIMETERS

ANGLES ±0° 30'

SURFACE QUALITY IN MICROINCHES

CLASS OF ACCURACY (CHECK ONE)

NOMINAL DIMENSION RANGE MILLIMETER

	OVER 1 TO 5	OVER 5 TO 30	OVER 30 TO 100	OVER 100 TO 300	OVER 300 TO 1000	OVER 1000 TO 2000
MEDIUM	±0.1	±0.2	±0.3	±0.4	±0.6	±1.0
PREFERRED	±0.3	±0.4	±0.6	±1.0	±1.8	±2.5

QUANTITY & VARIATION

THIRD ANGLE PROJECTION

REMOVE BURRS AND BREAK SHARP CORNERS

DO NOT SCALE DWG

MATERIAL: SEE PARTS LIST

FINISH

DPN: [illegible] 4/17/78

CHK'D: [illegible]

ENG.: [illegible] 4/17/78

PROJ. ENG: [illegible] 4/24/78

PROD.: [illegible]

NEXT HIGHER ASSY.: Ø-UA-VT5Ø-Ø-Ø

SCALE: NONE

SHEET 1 OF 1

FIRST USED ON: VT5Ø

digital

TITLE: CRT, GROUNDING ASSEMBLY

SIZE: 1 | CODE: IA | NUMBER: 7011197-0-0 | REV.

DIST.

REVISIONS: CHK | CHANGE NO. | REV.

BLC FORM NO. BA1-130

1 IA 7011197-0-0

"THIS DRAWING AND SPECIFICATIONS, HEREIN, ARE THE PROPERTY OF DIGITAL EQUIPMENT CORPORATION AND SHALL NOT BE REPRODUCED OR COPIED OR USED IN WHOLE OR IN PART AS THE BASIS FOR THE MANUFACTURE OR SALE OF ITEMS WITHOUT WRITTEN PERMISSION.
COPYRIGHT © 1975 DIGITAL EQUIPMENT CORPORATION"

NOTES:
1. MAKE FROM DEC PART #9008259-01

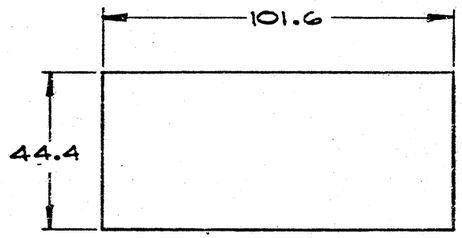

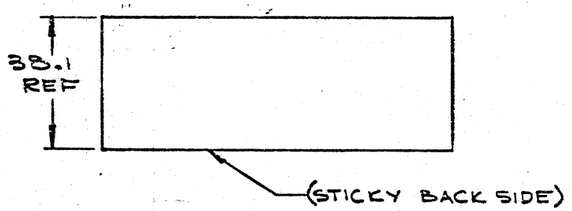

ITEM NO.	DESCRIPTION	DWG./PART NO.	
1	FOAM 1/2 X 54 X 30" (GRY)	9008269-01	1

UNLESS OTHERWISE SPECIFIED DIMENSIONS ARE IN MILLIMETERS

ANGLES ±0° 30'	CLASS OF ACCURACY (CHECK ONE)	NOMINAL DIMENSION RANGE MILLIMETER					
		OVER 1 TO 5	OVER 5 TO 30	OVER 30 TO 100	OVER 100 TO 300	OVER 300 TO 1000	OVER 1000 TO 2000
SURFACE QUALITY IN MICROINCHES	MEDIUM ☐	±0.1	±0.2	±0.3	±0.4	±0.6	±1.0
	PREFERRED ☐	±0.3	±0.4	±0.6	±1.0	±1.6	±2.5

QUANTITY & VARIATION

THIRD ANGLE PROJECTION

REMOVE BURRS AND BREAK SHARP CORNERS

DO NOT SCALE DWG

MATERIAL SEE NOTE #1

FINISH

DRN. George Drazin 4/14/75
CHK'D [illegible] 4-29-75
ENG. [illegible] 5/1-/75
PROJ. ENG. [illegible] 4/21/75
PROD. [illegible]
NEXT HIGHER ASSY. H-IA-7011197-0-0
SCALE 1/1
SHEET 1 OF 1

FIRST USED ON VT50

digital

TITLE
SUPPORT, CRT GROUNDING

SIZE	CODE	NUMBER	REV.
2	MD	7413757-0-0	

DIST.

7413757-0-0 MD 2

REVISIONS | REV. | CHANGE NO. | CHK

DEC FORM NO. BA2-120

"THIS DRAWING AND SPECIFICATIONS, HEREIN, ARE THE PROPERTY OF DIGITAL EQUIPMENT CORPORATION AND SHALL NOT BE REPRODUCED OR COPIED OR USED IN WHOLE OR IN PART AS THE BASIS FOR THE MANUFACTURE OR SALE OF ITEMS WITHOUT WRITTEN PERMISSION.
COPYRIGHT © 1975 DIGITAL EQUIPMENT CORPORATION"

NOTES:
1. MAKE FROM PURCHASE SPEC A-PS-9107682-0-0

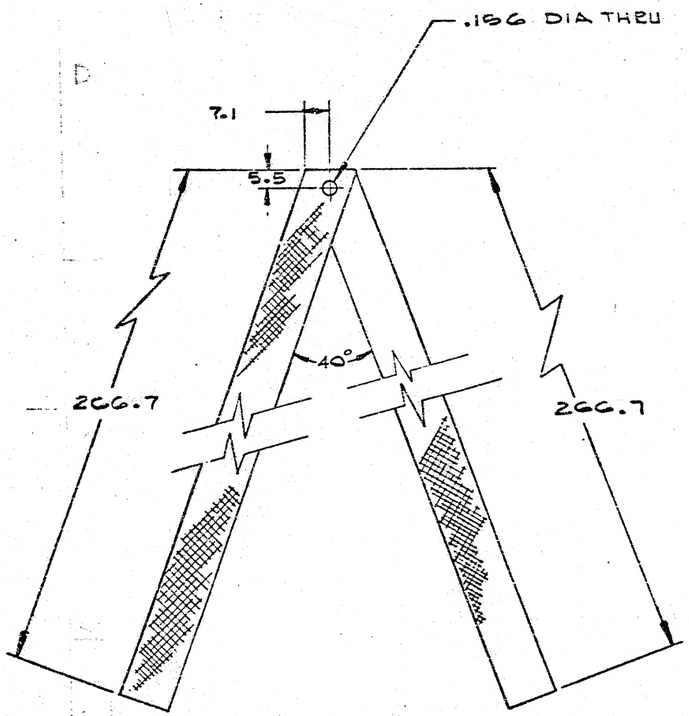

METRIC DIMENSIONS

1	SHIELDING, BRAIDED	9107682	1
	DESCRIPTION	DWG./PART NO.	ITEM NO.

UNLESS OTHERWISE SPECIFIED DIMENSIONS ARE IN MILLIMETERS

ANGLES ±0° 30'
SURFACE QUALITY IN MICROINCHES

CLASS OF ACCURACY (CHECK ONE)	NOMINAL DIMENSION RANGE MILLIMETER OVER 1 TO 5	OVER 5 TO 30	OVER 30 TO 100	OVER 100 TO 300	OVER 300 TO 1000	OVER 1000 TO 2000
MEDIUM	±0.1	±0.2	±0.3	±0.4	±0.6	±1.0
PREFERRED	±0.3	±0.4	±0.6	±1.0	±1.6	±2.5

QUANTITY & VARIATION

THIRD ANGLE PROJECTION

REMOVE BURRS AND BREAK SHARP CORNERS

DO NOT SCALE DWG

MATERIAL SEE PARTS LIST

FINISH —

DRN. George Drayton 4/18/75
CHK'D [illegible] 4/21/75
ENG. [illegible] 5/14/75
PROJ. ENG. [illegible] 4/29/75
PROD. [illegible]

NEXT HIGHER ASSY. I-IA-7011197-0-0

SCALE NONE

SHEET 1 OF 1

FIRST USED ON VT50

digital

TITLE STRAP, BRAIDED

SIZE	CODE	NUMBER	REV.
2	MD	7413956-0-0	

DIST.

REVISIONS: CHK | CHANGE NO. | REV.

DEC FORM NO. DA2-120

2 MD 7413956-0-0